Cucamonga Valley Water District

CONSTRUCT WATERLINE IN BASE LINE RD FROM DEER CREEK CHANNEL TO MILLIKEN AVE

CP25032

JANUARY 2026

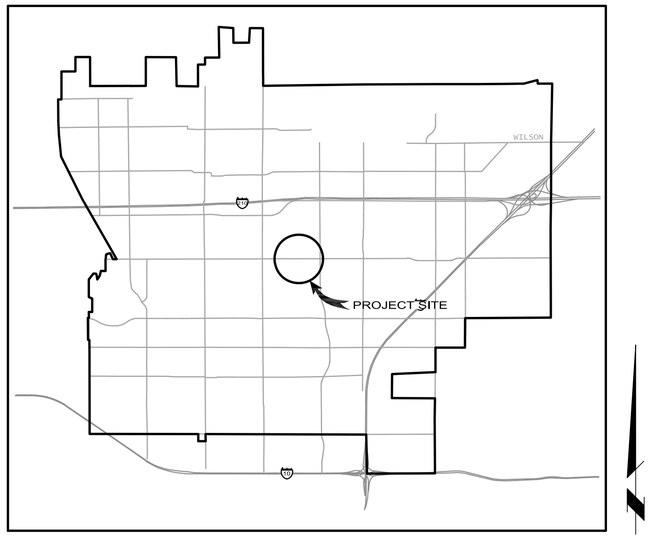

VICINITY MAP

N.T.S.

SHEET INDEX

SHT.	DWG.	SHEET TITLE
1	G-1	TITLE SHEET
2	G-2	GENERAL NOTES
3	G-3	ABBREVIATIONS AND LEGEND
4	G-4	KEY MAP AND SURVEY INFORMATION
5	C-1	NOT USED
6	C-2	PLAN AND PROFILE FROM 12+42.37 TO 17+00
7	C-3	PLAN AND PROFILE FROM 17+00 TO 21+50
8	C-4	PLAN AND PROFILE FROM 21+50 TO 26+00
9	C-5	PLAN AND PROFILE FROM 26+00 TO 30+50
10	C-6	PLAN AND PROFILE FROM 30+50 TO 35+50
11	C-7	PLAN AND PROFILE FROM 35+50 TO 40+00
12	C-8	PLAN AND PROFILE FROM 40+00 TO 44+50
13	C-9	PLAN AND PROFILE FROM 44+50 TO 46+55.52
14	C-10	DETAILS
15	C-11	DETAILS
16	SG1.0	NOT USED
17	S1.0	NOT USED
18	SD1.0	NOT USED

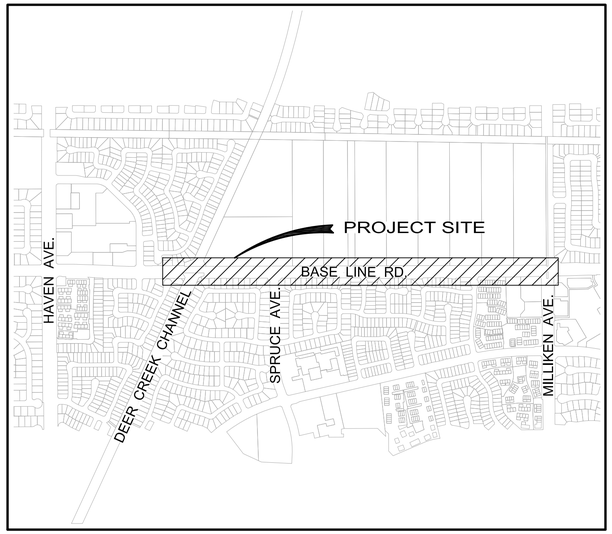

LOCATION MAP

N.T.S.

NOTICE TO CONTRACTOR

THE EXISTENCE AND LOCATION OF ANY UNDERGROUND UTILITIES OR STRUCTURES SHOWN ON THESE PLANS ARE OBTAINED BY A SEARCH OF AVAILABLE RECORDS, TO THE BEST OF OUR KNOWLEDGE. THE CONTRACTOR IS REQUIRED TO TAKE DUE PRECAUTIONARY MEASURES TO PROTECT THE UTILITY LINES SHOWN ON THESE DRAWINGS. THE CONTRACTOR FURTHER ASSUMES ALL LIABILITY AND RESPONSIBILITY FOR THE UTILITY PIPES, CONDUITS OR STRUCTURES SHOWN OR NOT SHOWN ON THESE DRAWINGS.

THE CONTRACTOR AGREES THAT HE SHALL ASSUME SOLE AND COMPLETE RESPONSIBILITY FOR THE JOB SITE CONDITIONS DURING THE COURSE OR CONSTRUCTION OF THIS PROJECT, INCLUDING SAFETY OF ALL PERSONS AND PROPERTY, THAT THIS SHALL APPLY CONTINUOUSLY AND NOT BE LIMITED TO NORMAL WORKING HOURS, AND THAT THE CONTRACTOR SHALL DEFEND, INDEMINIFY, AND HOLD THE OWNER HARMLESS FROM ANY AND ALL LIABILITY, REAL OR ALLEGED, IN CONNECTION WITH THE PERFORMANCE OF WORK ON THIS PROJECT.

CONTRACTOR SHALL VERIFY ALL CONDITIONS AND DIMENSIONS AND SHALL REPORT ALL DISCREPANCIES TO THE OWNER PRIOR TO THE COMMENCEMENT OF WORK.

SPECIAL NOTES

1. COMPACTION EQUIPMENT USED TO PLACE BACKFILL BEHIND CHANNEL WALL MUST NOT EXCEED 35,000 POUNDS INCLUDING DYNAMIC FORCED FROM VIBRATOR COMPACTOR.
2. NO EQUIPMENT IN EXCESS OF H-10 HIGHWAY LOADING (AASHTO), AND NO STOCKPILING OF MATERIAL WILL BE PERMITTED ALONG THE CHANNEL WITHIN A DISTANCE OF WALL HEIGHT.
3. NO EQUIPMENT IN EXCESS OF H-20 HIGHWAY LOADING WILL BE PERMITTED TO OPERATE ON THE INVERT OF THE CHANNEL. ONLY RUBBER-TIRED, LEGALLY LOADED EQUIPMENT SHALL BE OPERATED ON THE EXPOSED CHANNEL INVERT. IF STEEL CRAWLER TYPE EQUIPMENT IS USED, WOODEN MATTING SHALL BE PROVIDED OVER THE INVERT IN THE OPERATING AREA. LOADS FROM TRACK VEHICLES SHALL NOT EXCEED 300 PSF ON A SURFACE AT THE BOTTOM OF THE INVERT SLAB.

REV.	DESCRIPTION	DATE	APP'D

Underground Service Alert
Call: TOLL FREE
811
TWO WORKING DAYS BEFORE YOU DIG

REGISTERED PROFESSIONAL ENGINEER TUAN TRUONG No. 80604 Exp. 03-31-27 CIVIL STATE OF CALIFORNIA

PLANS APPROVED BY:

TUAN TRUONG, P.E.,
ENGINEERING MANAGER (CAPITAL & DEVELOPMENT)

DATE: 01-21-26 R.C.E. 80604 EXP. 03-31-27

DESIGNED BY: TUAN T.	DRAWN BY: TYLER B.
CHECKED BY: TUAN T.	DATE: 5/28/25

BAR SCALE BELOW IS ONE INCH ON ORGINAL DRAWING. IF NOT ONE INCH ON THIS SHEET, ADJUST SCALE ACCORDINGLY.
0" 1"

Cucamonga Valley Water District
10440 ASHFORD STREET,
RANCHO CUCAMONGA, CA 91729 (909) 987-2591

12" WATERLINE IN BASE LINE RD
CP25032
TITLE SHEET

G-1
AB
SHT. 1 OF 18

Lastsaved: TYLERB
Q:\CADD\CCWD CADD Drawings\Capital Improvements\Cp-25032 (Construct Waterline in Baseline Rd from Deer Creek to Milliken)\dwg\TB Working files\CP25032 Plan and Profile.dwg 1/22/2026 1:42 PM

W.O. CP25032

WATER GENERAL NOTES

1. ALL WORK TO BE PERFORMED ON THIS PROJECT SHALL MEET WITH THE APPROVAL OF THE CUCAMONGA VALLEY WATER DISTRICT'S INSPECTOR AND SHALL COMPLY WITH THE LATEST EDITION OF THE CONTRACT DRAWINGS, CUCAMONGA VALLEY WATER DISTRICT'S STANDARD DRAWINGS, STANDARD DRAWINGS FOR PUBLIC WORKS CONSTRUCTION (GREENBOOK), AND CITY'S STANDARD SPECIFICATIONS.

2. THE CONTRACTOR IS RESPONSIBLE FOR SECURING FROM THE CUCAMONGA VALLEY WATER DISTRICT COPIES OF THE LATEST PLANS, SPECIFICATIONS AND STANDARD DRAWING PRIOR TO START OF CONSTRUCTION. ANY DEVIATIONS FROM THE CONTRACT DOCUMENTS MUST BE ACCEPTED BY THE OWNER OR ENGINEER IN WRITING PRIOR TO THE WORK BEING DONE. ANY DEVIATIONS PERFORMED WITHOUT WRITTEN ACCEPTANCE WILL NOT BE PAID AND MAYBE REQUIRED TO BE REDONE AT THE CONTRACTOR'S EXPENSE.

3. MATERIALS TO BE PROVIDED BY CVWD ARE LISTED IN THE DRAWINGS OR SPECIFICATIONS. THE CONTRACTOR SHALL REVIEW THE LIST OF MATERIALS TO BE PROVIDED. THE CONTRACTOR IS RESPONSIBLE TO PROVIDE AND INSTALL ANY AND ALL ITEMS NOT SHOWN ON THE LIST AS NECESSARY TO FURNISH A FULL, COMPLETE AND OPERATING PROJECT AS INTENDED BY THE CONTRACT DOCUMENTS AND ALL MATERIAL SHALL BE NEW AND IN ACCORDANCE TO CVWD'S STANDARD SPECIFICATIONS.

4. THE CONTRACTOR SHALL RETURN ALL UNUSED MATERIAL AND SALVAGED MATERIAL FROM THE JOB SITE TO THE CUCAMONGA VALLEY WATER DISTRICT WAREHOUSE OR YARD WITHIN 5 WORKING DAYS AFTER COMPLETION OF WORK ON THIS PROJECT. THE CVWD INSPECTOR SHALL INDICATE THOSE ITEMS TO BE SALVAGED, IN ADDITION TO THOSE SPECIFIED IN THESE DRAWINGS.

5. THE CONTRACTOR PERFORMING WORK ON THIS PROJECT SHALL FAMILIARIZE THEMSELVES WITH THE PROJECT SITE AND THE CONSTRUCTION DOCUMENTS. THE CONTRACTOR SHALL VERIFY ALL EXISTING ITEMS WITHIN OR ADJACENT TO THE LIMITS OF WORK AND SHALL TAKE ALL PRECAUTIONARY MEASURES NECESSARY TO PROTECT THE EXISTING IMPROVEMENTS WHICH ARE TO REMAIN IN PLACE FROM DAMAGE. ALL IMPROVEMENTS DAMAGED BY CONTRACTOR'S OPERATIONS WHETHER DIRECTLY OR INDIRECTLY OR WHETHER OR NOT SHOWN ON THESE PLANS SHALL BE THE CONTRACTOR'S SOLE RESPONSIBILITY AND SHALL BE EXPEDITIOUSLY REPAIRED OR RECONSTRUCTED TO THE OWNER'S SATISFACTION AT THE CONTRACTOR'S EXPENSE WITHOUT ADDITIONAL COMPENSATION.

6. RIGHT-OF-WAY LINES ARE APPROXIMATE AND ARE ONLY INTENDED FOR GENERAL REFERENCES. NO RECORD OF SURVEY WAS CONDUCTED OR IMPLIED. THE CONTRACTOR IS RESPONSIBLE TO VERIFY ANY AND ALL PROPERTY OR EASEMENT DATA DEEMED NECESSARY TO PERFORM THE WORK AS SHOWN.

7. ALL UTILITIES SHOWN ON THESE DRAWINGS WERE LOCATED PER AS-BUILT INFORMATION PROVIDED TO THE ENGINEER. WHILE REASONABLE EFFORTS WERE EXPENDED IN MAKING SURE THAT THE INFORMATION SHOWN IS CORRECT BASED ON SUPPLIED INFORMATION SHOWN, THE CONTRACTOR SHALL BE RESPONSIBLE FOR FIELD LOCATING ALL UTILITIES ALONG THE PROPOSED ALIGNMENT AND SHALL BE RESPONSIBLE FOR PROTECTING OR RELOCATING THOSE UTILITIES IN ACCORDANCE WITH THE ENGINEERS DIRECTION.

8. THE CONTRACTOR SHALL BE RESPONSIBLE TO NOTIFY UNDERGROUND SERVICE ALERT (811) AT LEAST TWO WORKING DAYS (48 HOURS) PRIOR TO START OF CONSTRUCTION AND ALL POTHOLING NECESSARY TO VERIFY THE ELEVATIONS AND LOCATIONS OF ALL EXISTING UTILITIES THAT MAY POTIENTIALLY CONFLICT WITH THE SCOPE OF WORK AND THAT ARE WITHIN THE LIMITS OF WORK PRIOR TO ANY CONSTRUCTION OF FACILITIES. THE CONTRACTOR IS RESPONSIBLE FOR ALL PERMITS AND COSTS REQUIRED FOR POTHOLING. ANY NECESSARY CHANGES OF THE PROPOSED PIPE ALIGNMENT TO AVOID EXISTING UTILITIES SHALL BE REPORTED TO THE DISTRICT ENGINEER FOR REVIEW AND APPROVAL PRIOR TO CONTINUANCE OF CONSTRUCTION.

9. THE CONTRACTOR MUST OBTAIN ALL RELEVANT PERMITS FROM THE CITY AND RELEVANT AGENCIES AND IS RESPONSIBLE FOR PAYING FOR ALL PERMIT FEES. CONTRACTOR SHOULD BE PREPARED THAT TRAFFIC CONTROL PLANS MAY BE REQUIRED AND SHALL BE RESPONSIBLE FOR OBTAINING AND PAYING FOR TRAFFIC CONTROL PLANS, IF REQUIRED BY THE CITY.

10. CONTRACTOR SHALL BE RESPONSIBLE FOR OBTAINING AND COMPLYING WITH THE NPDES PERMIT.

11. NORMAL INSPECTION HOURS ARE 7:30 A.M. TO 4:00 PM, MONDAY THROUGH FRIDAY EXCEPT LEGAL HOLIDAYS OR AS REQUIRED BY CITY PERMIT, WHICHEVER IS MORE RESTRICTIVE. REQUESTS FOR INSPECTION AT OTHER TIMES OR ON OTHER DAYS MUST BE SUBMITTED TO THE CVWD ENGINEERING DEPARTMENT AND THE CITY A MINIMUM OF 5 WORKING DAYS BEFORE THE INSPECTION IS REQUIRED. THE CONTRACTOR MUST BEAR THE COST OF SUCH OVERTIME INSPECTIONS AND WILL BE BILLED ACCORDINGLY. NORMAL OVERTIME RATES ARE 1.5 TIMES THE BASE RATE PLUS OVERHEAD. OVERTIME INSPECTIONS WILL BE MADE SOLELY AT THE DISCRETION OF THE CITY AND BASED ON STAFF AVAILABILITY.

12. CONTRACTOR SHALL NOTIFY ALL AFFECTED BUSINESSES, RESIDENCES, AND PUBLIC FACILITIES BY USING DOOR HANGERS, AND ROADWAY SIGNS 48-HOUR PRIOR TO THE START OF CONSTRUCTION ACTIVITIES. IN ADDITION, THE CONTRACTOR MUST MAINTAIN SAFE AND CONTINUOUS ACCESS TO ALL BUSINESSES, RESIDENCES, AND PUBLIC FACILITIES WITH REFERENCE TO THE W.A.T.CH. MANUAL ALONG THE LIMITS OF WORK. DURING THE PERIOD OF CONSTRUCTION THE CONTRACTOR SHALL FURNISH, ERECT AND MAINTAIN WARNINGS SUCH AS SIGNAGE, SIGNAL BARRICADES, AND OTHER SAFETY MEASURES AS DIRECTED BY THE CITY OF RANCHO CUCAMONGA WITH REFERENCE TO THE W.A.T.CH MANUAL.

13. DUST SHALL BE CONTROLLED AT ALL TIMES BY APPROVED METHODS AND THE PUBLIC STREETS SHALL BE KEPT CLEAN AND FREE FROM DIRT AND/OR DEBRIS. THE CONTRACTOR SHALL BE RESPONSIBLE FOR ALL COSTS INCURRED FOR DUST CONTROL AND IN STREET CLEANING NECESSITATED BY HIS OPERATION.

14. ALL REMOVALS IN PAVED AREAS SHALL BE SAWCUT ON A NEAT AND STRAIGHT LINE. THE CUT EDGE SHALL BE PROTECTED FROM CRUSHING AND ALL BROKEN EDGES SHALL BE RE-CUT PRIOR TO PAVING OPERATIONS. ALL SIDEWALK CONCRETE REMOVALS SHALL BE TO NEAREST CONTROL CONSTRUCTION JOINT.

15. THE MINIMUM SEPARATION BETWEEN WATER LINES, RECYCLED WATER LINES AND SANITARY SEWER LINES SHALL CONFORM TO THE STATE OF CALIFORNIA ENVIRONMENTAL HEALTH CODE, TITLE 22, SECTION 64572 OR AS SHOWN IN THE CVWD STANDARD DRAWINGS AS THE CASE APPLIED.

16. THE MINIMUM COVER FOR 6-INCH OR SMALLER WATER LINES SHALL BE 30 INCHES, UP TO 10-INCH WATER LINES SHALL BE 36 INCHES, UP TO 12-INCH WATER LINES SHALL BE 42 INCHES, AND UP TO 16-INCH WATER LINES AND ABOVE SHALL BE 48 INCHES.

17. ALL JOINTS SHALL BE WELDED UNLESS OTHERWISE NOTED ON THE PLANS. ALL BURIED WATER PIPE SHALL BE CEMENT MORTAR LINED & COATED (CML & C) AND ALL ABOVE GROUND WATER PIPE SHALL BE CEMENT MORTAR LINED & PAINTED UNLESS OTHERWISE NOTED ON THE PLANS. FIELD JOINTS AND REPAIRS TO PIPE LINING AND COATING SHALL BE IN ACCORDANCE WITH THE LATEST EDITION OF ANSI/AWWA C205 AND C206. ALL BARE PIPING SHALL BE PAINTED PER CVWD STANDARDS.

18. CONNECTIONS BETWEEN DIFFERENT CLASSES OF PIPE SHALL BE MADE WITH A CONNECTION RATED FOR THE HIGHER PRESSURE CLASS.

19. UTILIZE DIELECTRIC COUPLINGS AND SIMILAR INSULATION BETWEEN DISSIMILAR METALS, INCLUDING BETWEEN BUT NOT LIMITED TO STEEL, STAINLESS STEEL, DUCTILE IRON AND COPPER.

20. THE ENGINEERING DEPARTMENT WILL REVIEW CONTRACTOR-SUPPLIED COMPACTION TESTS AND OBTAIN APPROVAL FROM PUBLIC WORKS PRIOR TO ALLOWING ANY PLACEMENT OF CONCRETE OR ASPHALT.

21. SAND BEDDING AND SAND BACKFILL IN THE PIPE ZONE IS REQUIRED UNLESS NATIVE MATERIALS ARE CONSIDERED SUITABLE AS SUCH BY THE DISTRICT ENGINEER.

22. ANY UNDERCUT SEWERS WILL REQUIRE A ONE-SACK SAND SLURRY BACKFILL UP TO THE SPRING LINE OF THE SEWER PIPE.

23. TRENCH RESTORATION AND PAVEMENT REPAIR SHALL BE IN ACCORDANCE WITH THE STANDARDS AND SPECIFICATIONS OF THE APPROPRIATE LOCAL AGENCY.

24. THE CONTRACTOR SHALL ADJUST ALL GATE VALVE COVERS TO GRADE AFTER FINAL PAVING IS COMPLETED.

25. THE CONTRACTOR SHALL NOT MAKE ANY CONNECTION TO THE EXISTING CVWD DISTRIBUTION SYSTEM WITHOUT FIRST GAINING WRITTEN PERMISSION FROM THE WATER DEPARTMENT ENGINEER. IN THE EVENT THAT PERMISSION IS GRANTED, A CVWD INSPECTOR MUST BE PRESENT ON SITE TO WITNESS SAID CONNECTION(S).

26. PRIOR TO ACTIVATION AND ACCEPTANCE BY CVWD OF ANY NEWLY CONSTRUCTED WATER LINES, OR ANY CONNECTIONS TO EXISTING SYSTEMS, THE CONTRACTOR SHALL HYDROSTATICALLY TEST AND DISINFECT THE LINES IN ACCORDANCE WITH THE LATEST ADOPTED VERSIONS OF AWWA STANDARDS C604, C651, AND AWWA MANUAL M11 AND SHALL COMPLY WITH THE NPDES PERMIT REQUIREMENTS. ALL TESTING AND DISINFECTION SHALL BE MADE IN THE PRESENCE OF THE CVWD INSPECTOR AND THE CONTRACTOR SHALL NOTIFY THE ENGINEER NO LESS THAN TWENTY-FOUR (24) HOURS IN ADVANCE OF THE ACTUAL TIME OF TESTING AND/OR DISINFECTION SO THAT THE ENGINEER OR DESIGNEE MAY OBSERVE THE PROCEDURE. IF THE PRESSURE TEST, CHLORINATION OR BACTERIOLOGICAL TEST FAILS TO MEET THE REQUIREMENT OF THE SPECIFICATIONS OR NPDES PERMIT, THE CONTRACTOR SHALL MAKE NECESSARY REPAIRS, REPLACEMENTS OR REPETITION OF PROCEDURES UNTIL THE TEST PASSES AT HIS OWN EXPENSE.

27. ALL FLUSHING, CHLORINATION, AND TESTING SHALL BE PERFORMED EITHER BY (A) WATER TRUCK, OR (B) HYDRANT-TO HYDRANT CONNECTION THROUGH AN APPROVED BACKFLOW PREVENTION ASSEMBLY.

28. THE CONTRACTOR SHALL RESTORE EXISTING ASPHALT PAVEMENT PER CITY OF RANCHO CUCAMONGA STANDARD PLAN NO 120, TRENCH REPAIR.

CONTRACTOR SUPPLIED MATERIALS

THE CONTRACTOR SHALL FURNISH AND INSTALL ALL MATERIALS REQUIRED TO CONSTRUCT ALL PHASES OF THE WATERLINE PROJECT COMPLETE AND IN ACCORDANCE WITH THE STANDARD SPECIFICATIONS OF THE CUCAMONGA VALLEY WATER DISTRICT. A LIST OF MATERIALS, INCLUDING BUT NOT LIMITED TO SHOP DRAWINGS AND SPECIFICATIONS, SHALL BE SUBMITTED TO THE DISTRICT FOR THE WATERLINE FACILITIES SHOWN WITHIN THESE PLANS.

CONSTRUCTION NOTIFICATION

CONTRACTOR SHALL BE RESPONSIBLE TO PROVIDE WRITTEN NOTIFICATION TO ALL PROPERTY AND BUSINESS OWNERS 48 HOURS IN ADVANCE PRIOR TO ANY CONSTRUCTION ACITVITY, INCLUDING POTHOLING AND SHUT-DOWN THE PROJECT.

DEVIATIONS FROM STANDARDS

1. THERE ARE NO DEVIATIONS FROM APPLICABLE CVWD STANDARDS. UNLESS STATED IN THE SPECIFICATIONS.

CONTRACT DOCUMENTS AND SPECIFICATIONS

THE CONTRACTOR IS HEREBY NOTIFIED THAT ESSENTIAL AND PERTINENT INFORMATION REGARDING THE CONSTRUCTION AND COMPLETION OF WORK FOR THIS PROJECT IS CONTAINED IN THE CONTRACT DOCUMENTS AND SPECIFICATIONS; IT IS THE CONTRACTOR'S RESPONSIBILITY TO READ AND REVIEW THIS INFORMATION TO THEIR OWN SATISFACTION PRIOR TO PERFORMING ANY WORK. DEFICIENT, INCOMPLETE, OR INCORRECT WORK SHALL BE THE RESPONSIBILITY OF THE CONTRACTOR AND SHALL BE REDONE TO MEET THE REQUIREMENTS AT THE CONTRACTOR'S SOLE EXPENSE.

SAFETY

NEITHER THE OWNER NOR THE ENGINEER OF WORK WILL ENFORCE SAFE MEASURES OR REGULATIONS. THE CONTRACTOR SHALL DESIGN, CONSTRUCT, AND MAINTAIN ALL SAFETY DEVICES, INCLUDING SHORING AND SHALL BE SOLELY RESPONSIBLE FOR CONFORMING TO ALL LOCAL, STATE, AND FEDERAL SAFETY AND HEALTH STANDARDS, LAWS AND REGULATIONS.

THE CONTRACTOR SHALL HAVE SHORING PLANS PREPARED BY A PROFESSIONAL ENGINEER AND SHALL SUBMIT THE PLANS TO THE DISTRICT.

SAFETY AND RESPONSIBILITY

CONTRACTOR AGREES TO ASSUME SOLE AND COMPLETE RESPONSIBILITY FOR THE JOB SITE CONDITIONS DURING THE COURSE OF CONSTRUCTION OF THIS PROJECT, INCLUDING SAFETY OF ALL PERSONS AND PROPERTY. CONTRACTOR FURTHER AGREES THAT THIS REQUIREMENT SHALL APPLY CONTINUOUSLY AND NOT BE LIMITED TO NORMAL WORKING HOURS, AND THAT THE CONTRACTOR SHALL DEFEND, INDEMNIFY, AND HOLD THE OWNER AND ENGINEER HARMLESS FROM ANY AND ALL LIABILITY REAL OR ALLEGED IN CONNECTION WITH THE PERFORMANCE OF WORK ON THE PROJECT, EXCEPTING LIABILITY ARISING FROM THE SOLE NEGLIGENCE OF THE OWNER OR THE ENGINEER.

PROPERTY LINES

LOCATION OF PROPERTY BOUNDARIES, RIGHT OF WAY, AN0 EASEMENTS SHOWN ON THE DRAWINGS ARE APPROXIMATE AND BASED ON RECORD DOCUMENTS. IF NO FIELD BOUNDARY OR EASEMENT SURVEY HAS BEEN PERFORMED, CONTRACTOR IS RESPONSIBLE TO VERIFY ANY AND ALL PROPERTY OR EASEMENT DATA DEEMED NECESSARY TO PERFORM THE WORK AS SHOWN.

UTILITY MARKOUT

THE CONTRACTOR SHALL CALL UNDERGROUND SERVICE ALERT (U.S.A.) AT 1-800-227-2600 FOR MARKOUT OF EXISTING UTILITIES A MINIMUM OF 48 HOURS PRIOR TO ANY WORK OR EXCAVATION.

EXPLORATORY EXCAVATIONS

THE LOCATION AND ELEVATION OF BOTH NEW AND EXISTING IMPROVEMENTS TO BE MET BY WORK TO BE DONE, AND ALL OF NEW OR EXISTING BURIED UNDERGROUND UTILITIES AND STRUCTURES' SHALL BE CONFIRMED BY FIELD MEASUREMENTS PRIOR TO CONSTRUCTION. CONTRACTOR WILL BE RESPONSIBLE FOR OBTAINING ANY CITY OF RANCHO CUCAMONGA PUBLIC WORKS PERMITS PRIOR TO ANY EXPLORATORY EXCAVATIONS IN THE STREET. CONTRACTOR SHALL MAKE EXPLORATORY EXCAVATIONS AND LOCATE EXISTING UNDERGROUND FACILITIES SUFFICIENTLY AHEAD OF CONSTRUCTION TO PERMIT REVISION OF THE PLANS. SHOULD REVISIONS BE NECESSARY DUE TO THE ACTUAL LOCATION OF FACILITIES.

MONUMENTATION

PRIOR TO CONSTRUCTION, THE CONTRACTOR'S LICENSED SURVEYOR SHALL TIE OUT ALL AFFECTED STREET AND PROPERTY MONUMENTS WHICH MAY BE DISTURBED AS PART OF THE WORK. RE-ESTABLISHMENT AND FILING OF CORNER RECORDS AND OR A RECORD OF SURVEY FOR ALL DISTURBED/ REMOVED REPLACED MONUMENTS WILL BE REQUIRED PRIOR TO ACCEPTANCE OF THE WORK. WORK SHALL BE PERFORMED TO THE SATISFACTION OF AGENCIES HAVING JURISDICTION AND SHALL BE PERFORMED AT THE CONTRACTOR'S SOLE EXPENSE.

DAMAGED IMPROVEMENTS

ALL EXISTING IMPROVEMENTS, BOTH PUBLIC AND PRIVATE, INTENTIONALLY OR UNINTENTIONALLY DISTURBED, DESTROYED, OR REMOVED AS PART OF CONSTRUCTION, SHALL BE REPAIRED OR REPLACED TO THE SATISFACTION OF THE OWNER AT THE CONTRACTOR'S EXPENSE.

SURVEYING

CONTRACTOR SHALL EMPLOY THE SERVICES OF A LICENSED LAND SURVEYOR FOR PROJECT LAYOUT, CONSTRUCTION STAKING AND CONTROL.

PERMITS

CONTRACTOR SHALL OBTAIN ALL PERMITS REQUIRED TO COMPLETE THE WORK INCLUDING, BUT NOT LIMITED TO, COUNTY AND CITY TRAFFIC CONTROL PERMITS, STREET CUT AND OSHA.

UTILITY NOTES

1. CONTRACTOR SHALL NOTIFY UTILITY COMPANIES PRIOR TO STARTING WORK NEAR COMPANY FACILITIES AND COORDINATE WORK WITH COMPANY REPRESENTATIVES. IT SHALL BE THE RESPONSIBILITY OF THE CONTRACTOR TO CONTACT THE UTILITY COMPANIES, ADVISE THEM OF THE PROPOSED IMPROVEMENTS AND BEAR THE COST OF RELOCATION, IF NEEDED.

2. LOCATION AND ELEVATION OF IMPROVEMENTS TO BE MET BY WORK TO BE DONE SHALL BE CONFIRMED BY FIELD MEASUREMENTS PRIOR TO PREPARATION OF SHOP DRAWINGS CONSTRUCTION OF NEW WORK.

3. CONTRACTOR IS REQUIRED TO TAKE PRECAUTIONARY MEASURES TO PROTECT THE UTILITY LINES SHOWN HEREON AND ANY OTHER EXISTING LINES NOT OF RECORD OR NOT SHOWN ON THESE PLANS.

REV.	DESCRIPTION	DATE	APP'D

Underground Service Alert
Call: TOLL FREE
811
TWO WORKING DAYS BEFORE YOU DIG

REGISTERED PROFESSIONAL ENGINEER TUAN TRUONG No. 80604 Exp. 03-31-27 CIVIL STATE OF CALIFORNIA

PLANS APPROVED BY:
TUAN TRUONG, P.E.,
ENGINEERING MANAGER (CAPITAL & DEVELOPMENT)
DATE: 01-21-26 R.C.E. 80604 EXP. 03-31-27

DESIGNED BY: TUAN T.	DRAWN BY: TYLER B.
CHECKED BY: TUAN T.	DATE: 5/28/25

BAR SCALE BELOW IS ONE INCH ON ORGINAL DRAWING. IF NOT ONE INCH ON THIS SHEET, ADJUST SCALE ACCORDINGLY.
0" 1"

Cucamonga Valley Water District
10440 ASHFORD STREET,
RANCHO CUCAMONGA, CA 91729 (909) 987-2591

12" WATERLINE IN BASE LINE RD
CP25032
GENERAL NOTES

G-2
AB
SHT. 2 OF 18

W.O. CP25032

Lastsaved: TYLERB
Q:\CADD\CCWD CADD Drawings\Capital Improvements\Cp-25032 (Construct Waterline in Baseline Rd from Deer Creek to Milliken)\dwg\TB Working files\CP25032 Plan and Profile.dwg 1/22/2026 1:42 PM

AB	AGGREGATE BASE
ABC	AGGREGATE BASE COURSE
AC	ASPHALTIC CONCRETE
ACP	ASBESTOS CEMENT PIPE
ADA	AMERICAN DISABILITY ACT
AD	AREA DRAIN
AMS	ANGLE METER STOP
AMI	AMERICAN NATIONAL STANDARDS INSTITUTE
ANSI	AUTOMATED METER INFRASTRUCTURE
ASTM	AMERICAN SOCIETY OF TESTING MATERMS
AV	AIR VENT/AIR VALVE
AVAR	AIR VACUUM AIR RELEASE VALVE
AVE	AVENUE
AWWA	AMERICAN WATER WORKS ASSOCIATION
BCR	BEGIN CURB RETURN
B&S	BELL & SPIGOT
BC	BACK OF CURB/BEGIN OF CURVE
BFP	BACKFLOW PREVENTER
BFV	BUTTERFLY VALVE
BL–FLG	BLIND FLANGE
BLDG	BUILDING
BLM	BUREAU OF LAND MANAGEMENT
BLVD	BOULEVARD
BM	BENCHMARK
BO	BLOW OFF ASSEMBLY
BOC	BACK OF CURB
BPV	BACK PRESSURE VALVE
BV	BALL VALVE
BW	BACK OF SIDEWALK
C&G	CURB & GUTTER
CAV	COMBINATION AIR VALVE
CIP	CAST IRON PIPE/CAST IN PLACE
℄	CENTERLINE
CL2	CHLORINE
CLO	CLEANOUT
CLSM	CONTROLLED LOW STRENGTH MATERIAL
CMP	CORRUGATED METAL PIPE
CMU	CONCRETE MASONRY UNIT
CONC	CONCRETE
CORP STOP	CORPORATION STOP
CPLG	COUPLING
CTV	CABLE TELEVISION
CV	CONTROL VALVE
CY	CUBIC YARD
D/W	DRIVEWAY
DEMO	DEMOLITION
DEPT	DEPARTMENT
DET	DETAIL
DI	DROP INLET
DIA OR O	DIAMETER
DIP	DUCTILE IRON PIPE
DMH	DROP MANHOLE
DR	DRIVE
DWG	DRAWING
DWR	STATE OF CALIFORNIA DEPARTMENT OF WATER RESOURCES
ECR	END OF CURVE
E	EASTING
EA	EACH
EC	END OF CURVE
ECC	ECCENTRIC
ELEV	ELEVATION
EP	EDGE OF PAVEMENT
EOS	EDGE OF SHOULDER
ESMT	EASEMENT
ETC	ETCETERA
EX	EXISTING
F/F	FACE TO FACE
FF	FINISHED FLOOR
FG	FINISH GRADE
FH	FIRE HYDRANT
FIG	FIGURE
FL OR F	FLOW LINE
FLG	FLANGE
FO	FIBER OPTIC
FRP	FIBERGLASS REINFORCED POLYMER
FT	FOOT OR FEET
G	GAS
GPS	GLOBAL POSITIONING SYSTEMGVA
GV	GATE VALVE
HORI	HORIZONTAL
HP	HORSE POWER
HVAC	HEATING VENTILATING & AIR CONDITIONING
HWY	HIGHWAY
ID	INSIDE DIAMETER
IN	INCH
INV	INVERT
LAD	LADDER
LB OR #	POUND
LDR	LEADER
LEN	LENGTH OF CURVATURE
LF	LINEAR FOOT
LG	LONG
LN	LANE
LT	LEFT/LIGHT
LWR	LOWER

M	METER
MATL	MATERIAL
MAX	MAXIMUM
MC	MORTAR COATED
MG	MILLION GALLONS
MGD	MILLION GALLONS PER DAY
MH	MANHOLE
MIN	MINIMUM
MISC	MISCELLANEOUS
MJ	MECHANICAL JOINT
ML	MORTAR LINED
MLC	MORTAR LINED & COATED
MON	MONUMENT
MOV	MOTOR OPERATED VALVE
N	NORTHING
NAVD	NORTH AMERICAN VERTICAL DATUM
NE	NORTHEAST
NG	NATURAL GROUND
NIC	NOT IN CONTRACT
NIP	NOT IN PROJECT
NO. #	NUMBER
NTS	NOT TO SCALE
NW	NORTHWEST
OD	OUTSIDE DIAMETER
OHP	OVER HEAD POWER
OHTEL	OVER HEAD TELEPHONE
ORIG	ORIGINAL
OSHA	OCCUPATIONAL SAFETY AND HEALTH ADMINISTRATION
PC	POINT CURVATURE
PE	PLAIN END
PROP	PROPOSED
PRV	PRESSURE REGULATING / REDUCING VALVE
PSI	PRESSURE SWITCH/PUMP STATION
PT	POINT OF TANGENCY
PV	PLUG VALVE
PVC	POLYVINYL CHLORIDE PIPE
PRC	POINT OF REVERSE CURVE
R	RADIUS
R/W	RIGHT–OF–WAY
RCB	REINFORCED CONCRETE BOX
RCP	REINFORCED CONCRETE PIPE
RD	ROAD
RR	RAILROAD
RSGV	RESILIENT SEALED GATE VALVE
RT	RIGHT
S	SOUTH
SBCFCD	SAN BERNARDINO COUNTY FLOOD CONTROL DISTRICT
SCH	SCHEDULE
SD	STORM DRAIN
SE	SOUTHEAST
SHT	SHEET
SOW	SLIP ON WELD
SPCS	STATE PLANE COORDINATES SYSTEM
SPEC(S)	SPECIFICATION(S)
SQ FT	SQUARE FOOT (FEET)
SS	SANITARY SEWER
SSPWC	STANDARDS & SPECIFICATIONS FOR PUBLIC WORKS CONSTRUCTION
ST	STREET
STA	STATION
STL	STEEL
SW	SOUTHWEST
SWP	SOUTHWEST STATE WATER PROJECT
t	THICKNESS OF STEEL OR WELD
T	TELEPHONE
TBM	TEMPORARY BENCH MARK
TC	TOP OF CURB
TEMP	TEMPORARY
TOF	TOP OF FOOTING
TOG	TOP OF GRATE
TOW	TOP OF WALL
TP	TELEPHONE POLE
(TYP)	TYPICAL
UE	UNDERGROUND ELECTRIC
UFC	UNIFORM FIRE CODE
UL	UNDERWRITERS LABORATORIES
UNO	UNLESS NOTED OTHERWISE
UPRR	UNION PACIFIC RAILROAD
USGS	UNITED STATES GEODETIC SURVEY
UTIL	UTILITIES
V	VALVE
VCP	VITRIFIED CLAY PLPE
VERT	VERTICAL
VPI	VERTICAL POINT OF INTERSECTION
W/	WITH
W	WEST/WATER
W/O	WITHOUT
WM	WATER METER
WS	WATER SURFACE
WSP	WELDED STEEL PIPE
WWF	WELDED WIRE FABRIC
WWM	WELDED WIRE MESH
WV	WATER VALVE

LEGEND

	DEMOLISH OR ABANDON
	PROPOSED CLASS II BASE
	PROPOSED 3" A.C. ON 6" CAB ACCESS ROADWAY
	FLOWLINE
1	CURVE DATA
1	CONSTRUCTION NOTE
1	CONTROL POINTS
CONC.	CONCRETE
G.B.	GRADE BREAK
FS	FINISHED SURFACE
FL	FLOW LINE
TC	TOP CURB
HP	HIGH POINT
T.G.	TOP GRATE
N.I.C.	NOT IN CONTRACT
ø	DIAMETER
	WATER VALVE
PB	ELECTRIC PULLBOX
(XX)	EXISTING ELEVATION
	PROPOSED MAIN
	EXISTING MAIN
	SO. CAL. GAS
	SO. CAL. EDISON
	TELEPHONE
	SEWER
	STORM DRAIN
	FIRE HYDRANT
	EXISTING W.M.
	EXISTING G.V.
DRAWING OR SECTION REF. # (DETAIL) OR LETTER (SECTION) / DRAWING # SHEET WHERE DETAIL OR SECTION RESIDES	A / C–1 REFERENCE BUBBLE
	RIGHT OF WAY
(W)	SOLID WELD JOINTS
	EDGE OF PAVEMENT

DEMOLITION NOTES

- A ABANDON EXISTING PIPE IN PLACE. TO REMAIN IN SERVICE UNTIL NEW WATERLINE IS INSTALLED.
- B REMOVE & REPLACE EXISTING CHAIN LINK FENCE & GUARDRAIL IN KIND.
- C REMOVE INTERFERING PORTIONS OF EXISTING PIPE AS NECESSARY.
- D REMOVE & REPLACE EXISTING MEDIAN CURB IN KIND.
- E REMOVE EXISTING F.H. HEAD AND RETURN TO YARD.
- F ABANDON EXISTING VALVE IN PLACE
- G REMOVE EXISTING VALVE AND RETURN TO YARD.
- H REMOVE EXISTING AIR–VAC ASSEMBLY AND RETURN TO YARD

CONSTRUCTION NOTES

1. FURNISH AND INSTALL 12" CML&C STEEL PIPE
2. FURNISH AND INSTALL 10" CML&C STEEL PIPE
3. FURNISH AND INSTALL 8" CML&C STEEL PIPE
4. FURNISH AND INSTALL 12" R.W. GATE VALVE (CL150) PER CVWD STD DWG. NO. 115
5. FURNISH AND INSTALL 10" R.W. GATE VALVE (CL150) PER CVWD STD DWG. NO. 115
6. FURNISH AND INSTALL 8" R.W. GATE VALVE (CL150) PER CVWD STD DWG. NO. 115
7. FURNISH AND INSTALL 12" S.O.W. FLANGE (CL150)
8. FURNISH AND INSTALL 10" S.O.W. FLANGE (CL150)
9. FURNISH AND INSTALL 8" S.O.W. FLANGE (CL150)
10. FURNISH AND INSTALL 12" BUTTSTRAP WITH HAND HOLES
11. FURNISH AND INSTALL 10" BUTTSTRAP WITH HAND HOLES
12. FURNISH AND INSTALL 8" BUTTSTRAP WITH HAND HOLES
13. FURNISH AND INSTALL 12" X 10" TEE (P.E.)
14. FURNISH AND INSTALL 12" X 8" TEE (P.E.)
15. FURNISH AND INSTALL 12" CML&C – 90° BEND (P.E.)
16. FURNISH AND INSTALL 12" CML&C – 45° BEND (P.E.)
17. FURNISH AND INSTALL 10" CML&C – 45° BEND (P.E.)
18. FURNISH AND INSTALL 8" CML&C – 45° BEND (P.E.)
19. FURNISH AND INSTALL 2" AIR VACCUM PER CVWD STD. DWG. 120.
20. FURNISH AND INSTALL 4" BLOW–OFF PER CVWD STD. DWG. NO. 119.
21. FURNISH AND INSTALL FIRE HYDRANT ASSEMBLY PER CVWD STD. DWG. NO. 113.
22. FURNISH AND INSTALL 12" BLIND FLANGE
23. FURNISH AND INSTALL 8" BLIND FLANGE
24. FURNISH AND INSTALL 12" CML&PAINTED STEEL PIPE
25. FURNISH AND INSTALL 12" CML&PAINTED – 90° BEND (P.E.)

REV.	DESCRIPTION	DATE	APP'D

Underground Service Alert
Call: TOLL FREE
811
TWO WORKING DAYS BEFORE YOU DIG

REGISTERED PROFESSIONAL ENGINEER TUAN TRUONG No. 80604 Exp. 03–31–27 CIVIL STATE OF CALIFORNIA

PLANS APPROVED BY:
TUAN TRUONG, P.E.,
ENGINEERING MANAGER (CAPITAL & DEVELOPMENT)
DATE: 01–21–26 R.C.E. 80604 EXP. 03–31–27

DESIGNED BY: TUAN T.
DRAWN BY: TYLER B.
CHECKED BY: TUAN T.
DATE: 5/28/25
BAR SCALE BELOW IS ONE INCH ON ORGINAL DRAWING. IF NOT ONE INCH ON THIS SHEET, ADJUST SCALE ACCORDINGLY.
0" 1"

Cucamonga Valley Water District
10440 ASHFORD STREET,
RANCHO CUCAMONGA, CA 91729 (909) 987-2591

12" WATERLINE IN BASE LINE RD
CP25032
ABBREVIATION AND LEGEND

G-3
AB
SHT. 3 OF 18

W.O. CP25032

Lastsaved: TYLERB
Q:\CADD\CCWD CADD Drawings\Capital Improvements\Cp-25032 (Construct Waterline in Baseline Rd from Deer Creek to Milliken)\dwg\TB Working files\CP25032 Plan and Profile.dwg 1/22/2026 1:42 PM

POINT DESIGNATION	DESCRIPTION	COORDINATES		ELEVATION
		NORTHING	EASTING	
1	FD 1" IP TAG ILLEGIBLE	1866874.00'	6689993.01'	1316.33'
2	FD N&T LS8823	1866921.39'	6692415.16'	1324.21'
3	FD N&T LS4693	1866888.74'	6695589.29'	1330.18'

SURVEY INFORMATION (12" WATERLINE IN BASE LINE RD.)

SURVEYOR

CORNERSTONE LAND SURVEYING INC.
20730 KNOB PLACE
PERRIS, CA 92570
PHONE: (951) 736-0200

COORDINATE SYSTEM

HELD SAN BERNARDINO COUNTY GPS CONTROL POINT NO. 21792 BEING A 1" IRON PIPE AT THE INTERSECTION OF MARINE AND HUMBOLT. THESE COORDINATE WERE ADJUSTED FROM THE 1992.88 EPOCH TO THE 2007.6815 EPOCH. STATE PLANE COORDINATE SYSTEM, ZONE 5.

BASIS OF BEARINGS

THE BEARING BETWEEN SAN BERNARDINO COUNTY GPS CONTROL POINT NUMBERS 21792 (MEASURED PT. #202) AND 21791 (MEASURED PT. #203) WHICH BEARS N 82° 54' 23" W.

BENCHMARK

SAN BERNARDINO COUNTY BM NO. SPSN 01098 ELEV=1074.16 FT. (10/25/82)
FOUND NAIL IN TOP OF CURB LOCATED 1FT. NORTH OF THE END OF CURB RETURN AT THE NORTHEAST CORNER OF HAVEN AVENUE AND 6TH STREET.

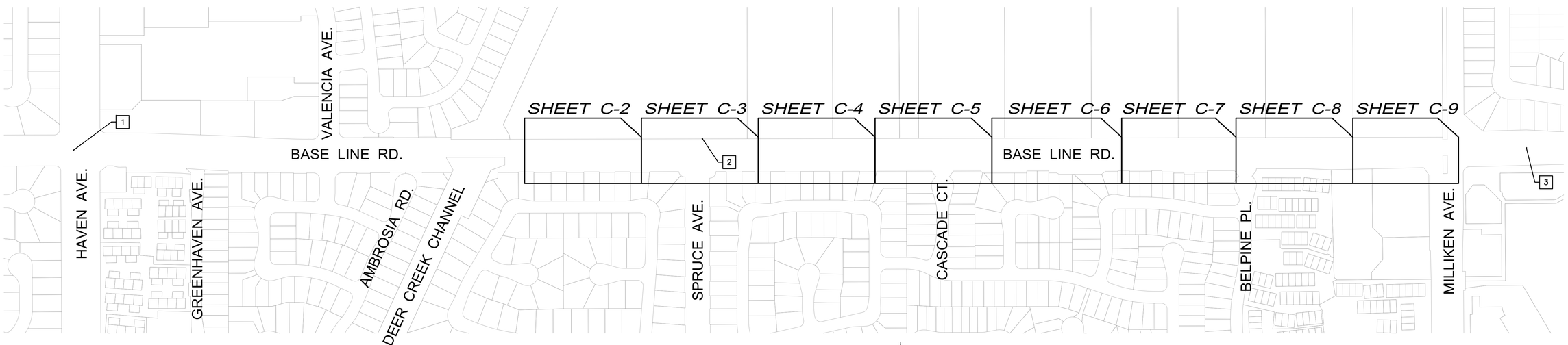

KEY MAP
N.T.S.

REV.	DESCRIPTION	DATE	APP'D

Underground Service Alert
Call: TOLL FREE
811
TWO WORKING DAYS BEFORE YOU DIG

REGISTERED PROFESSIONAL ENGINEER TUAN TRUONG No. 80604 Exp. 03-31-27 CIVIL STATE OF CALIFORNIA

PLANS APPROVED BY:
TUAN TRUONG, P.E.,
ENGINEERING MANAGER (CAPITAL & DEVELOPMENT)
DATE: 01-21-26 R.C.E. 80604 EXP. 03-31-27

DESIGNED BY: TUAN T.
DRAWN BY: TYLER B.
CHECKED BY: TUAN T.
DATE: 5/28/25

BAR SCALE BELOW IS ONE INCH ON ORGINAL DRAWING. IF NOT ONE INCH ON THIS SHEET, ADJUST SCALE ACCORDINGLY.
0" 1"

Cucamonga Valley Water District
10440 ASHFORD STREET,
RANCHO CUCAMONGA, CA 91729 (909) 987-2591

12" WATERLINE IN BASE LINE RD
CP25032
KEY MAP AND SURVEY INFORMATION

G-4
AB
SHT. 4 OF 18

W.O. CP25032

Lastsaved: TYLERB
Q:\CADD\CCWD CADD Drawings\Capital Improvements\Cp-25032 (Construct Waterline in Baseline Rd from Deer Creek to Milliken)\dwg\TB Working files\CP25032 Plan and Profile.dwg 1/22/2026 1:42 PM

NOTE:
CONTRACTOR TO POTHOLE AND VERIFY ELEVATION OF UTILITIES PRIOR TO CONSTRUCTION.

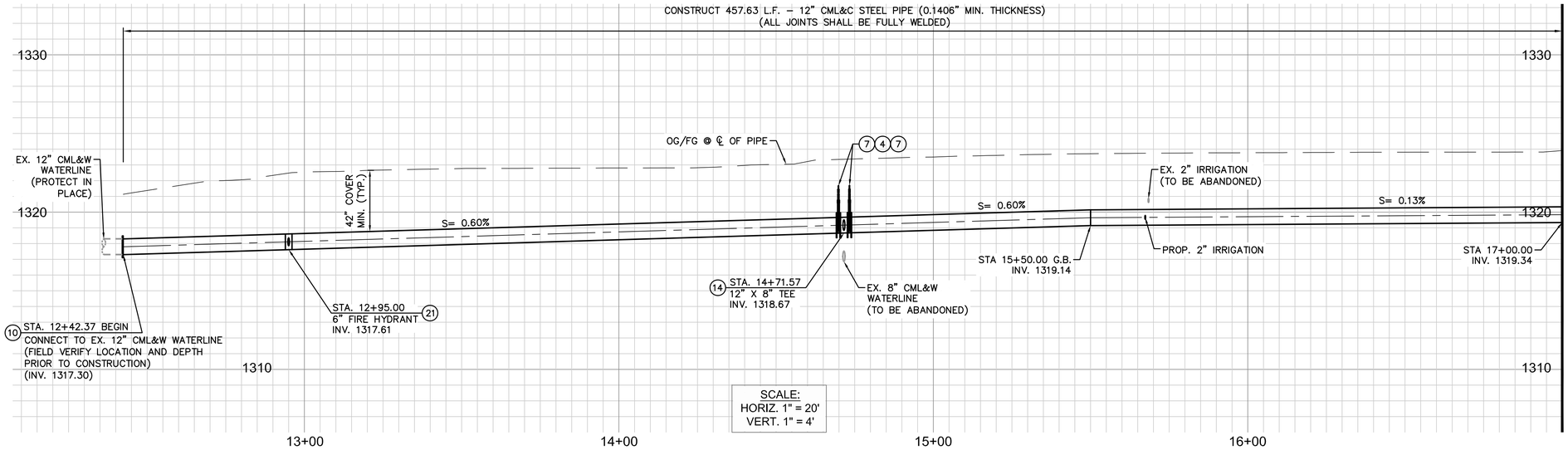

DEMOLITION NOTES

- A — ABANDON EXISTING PIPE IN PLACE. TO REMAIN IN SERVICE UNTIL NEW WATERLINE IS INSTALLED.
- C — REMOVE INTERFERING PORTIONS OF EXISTING PIPE AS NECESSARY.

CONSTRUCTION NOTES

1. FURNISH AND INSTALL 12" CML&C STEEL PIPE
4. FURNISH AND INSTALL 12" R.W. GATE VALVE (CL150) PER CVWD STD DWG. NO. 115
7. FURNISH AND INSTALL 12" S.O.W. FLANGE (CL150)
10. FURNISH AND INSTALL 12" BUTTSTRAP WITH HAND HOLES
14. FURNISH AND INSTALL 12" X 8" TEE (P.E.)
16. FURNISH AND INSTALL 12" CML&C – 45° BEND (P.E.)
21. FURNISH AND INSTALL FIRE HYDRANT ASSEMBLY PER CVWD STD. DWG. NO. 113.

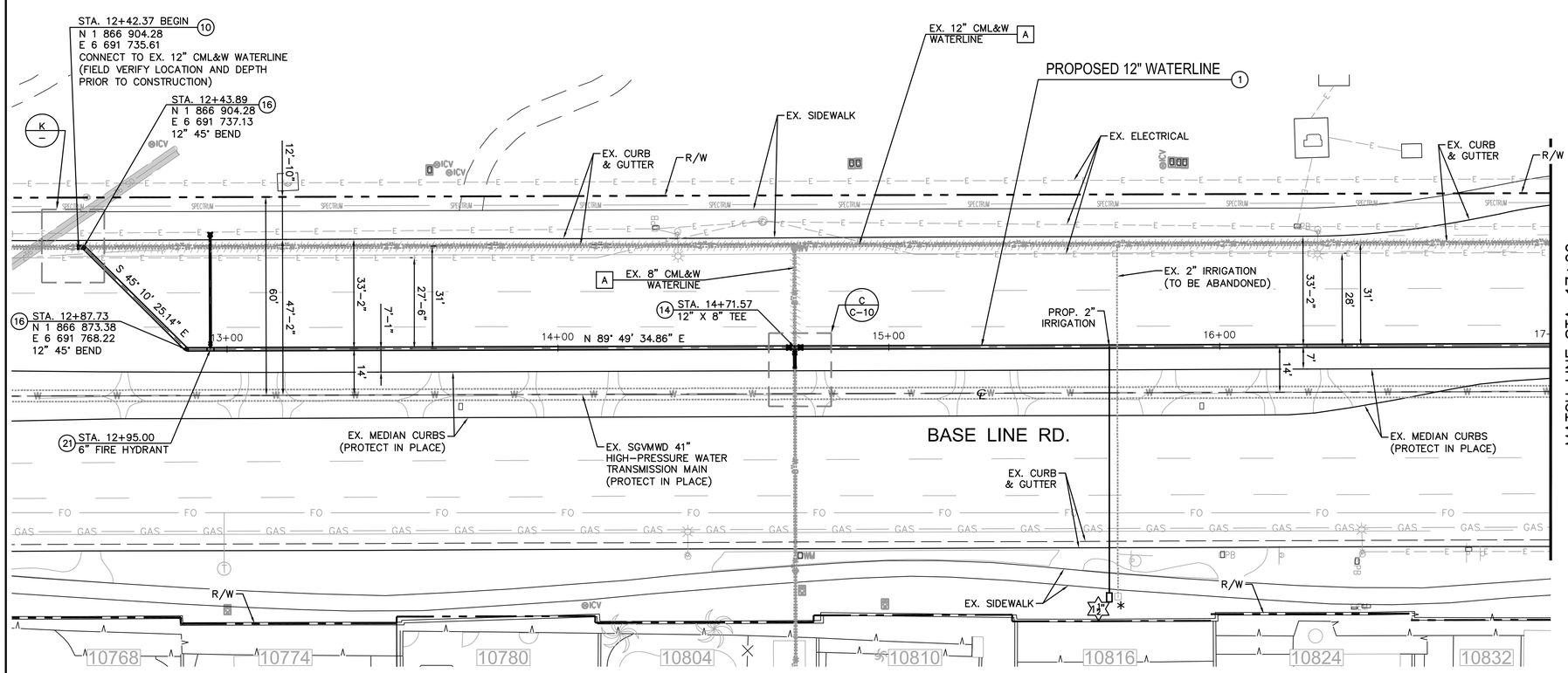

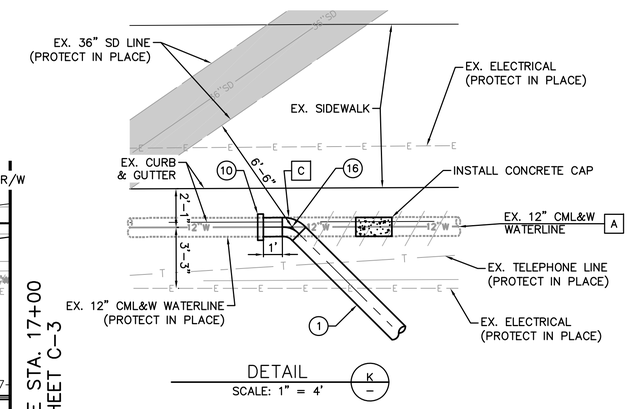

DETAIL K –
SCALE: 1" = 4'

SERVICE NOTES

FURNISH & INSTALL 2" IRRIGATION COPPER SERVICE, INCLUDING INSTALL DISTRICT FURNISHED AMI READY METER (SIZE AS NOTED) & 19.5"X32.25"X12" METER BOX, AND CONNECT PER CVWD STD. DWG. 103. SHOWN PLAN ONLY.

ABANDON EXISTING SERVICE WITH MAIN *

20 10 0 20 40
SCALE IN FEET
1 inch = 20 ft.

REV.	DESCRIPTION	DATE	APP'D

Underground Service Alert
Call: TOLL FREE
811
TWO WORKING DAYS BEFORE YOU DIG

REGISTERED PROFESSIONAL ENGINEER TUAN TRUONG No. 80604 Exp. 03-31-27 CIVIL STATE OF CALIFORNIA

PLANS APPROVED BY:
TUAN TRUONG, P.E.,
ENGINEERING MANAGER (CAPITAL & DEVELOPMENT)
DATE: 01-21-26 R.C.E. 80604 EXP. 03-31-27

DESIGNED BY: TUAN T.
DRAWN BY: TYLER B.
CHECKED BY: TUAN T.
DATE: 5/28/25

BAR SCALE BELOW IS ONE INCH ON ORGINAL DRAWING. IF NOT ONE INCH ON THIS SHEET, ADJUST SCALE ACCORDINGLY.
0" 1"

Cucamonga Valley Water District
10440 ASHFORD STREET, RANCHO CUCAMONGA, CA 91729 (909) 987-2591

12" WATERLINE IN BASE LINE RD
CP25032
PLAN AND PROFILE - STA 12+50 TO STA 17+00

C-2
AB
SHT. 6 OF 18

W.O. CP25032

Lastsaved: TYLERB
Q:\CADD\CCWD CADD Drawings\Capital Improvements\Cp-25032 (Construct Waterline in Baseline Rd from Deer Creek to Milliken)\dwg\TB Working files\CP25032 Plan and Profile.dwg 1/22/2026 1:42 PM

NOTE:
CONTRACTOR TO POTHOLE AND VERIFY ELEVATION OF UTILITIES PRIOR TO CONSTRUCTION.

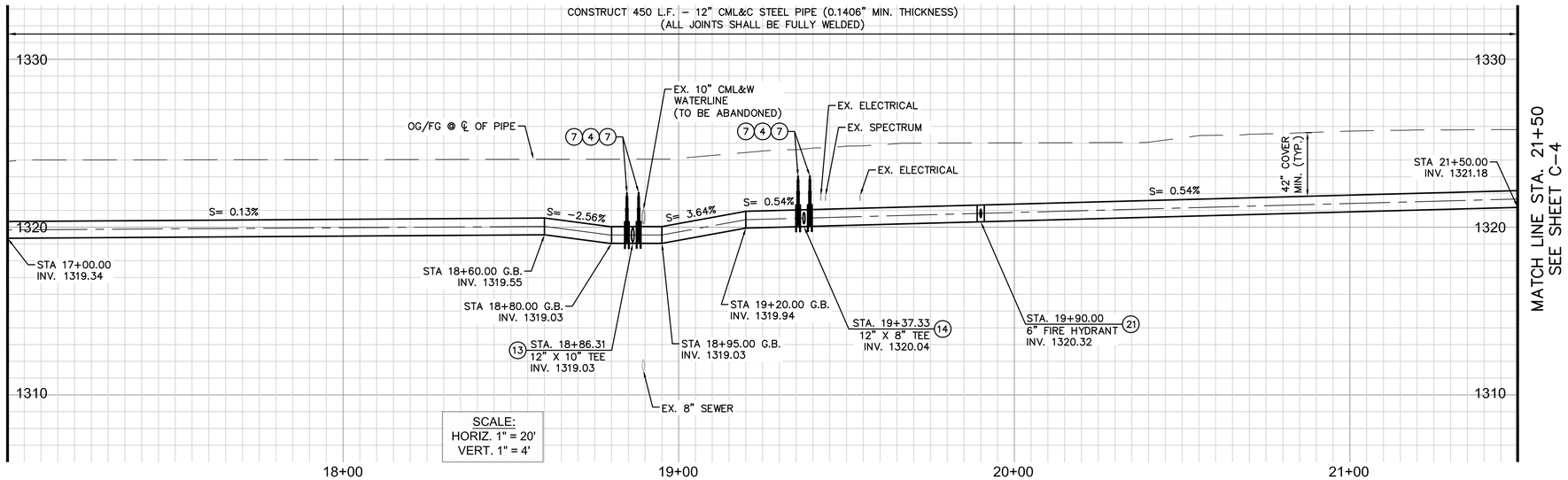

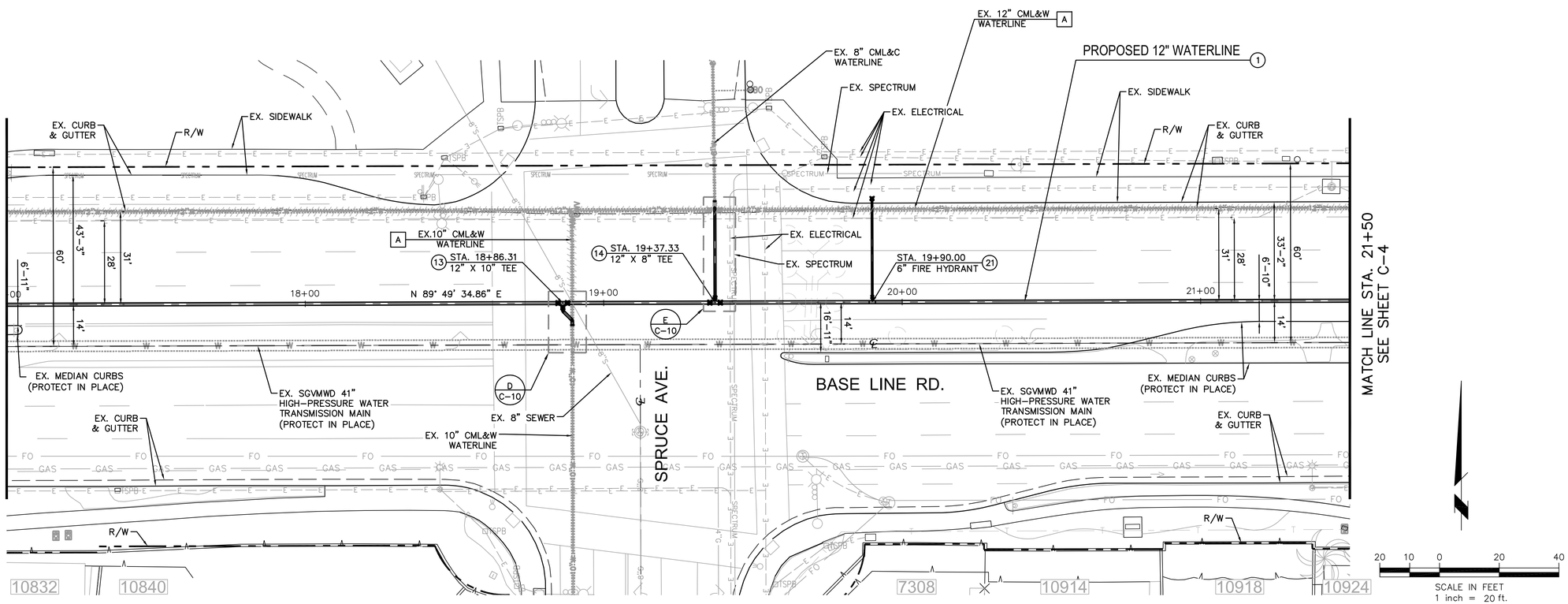

DEMOLITION NOTES

A ABANDON EXISTING PIPE IN PLACE. TO REMAIN IN SERVICE UNTIL NEW WATERLINE IS INSTALLED.

CONSTRUCTION NOTES

1. FURNISH AND INSTALL 12" CML&C STEEL PIPE
4. FURNISH AND INSTALL 12" R.W. GATE VALVE (CL150) PER CVWD STD DWG. NO. 115
7. FURNISH AND INSTALL 12" S.O.W. FLANGE (CL150)
13. FURNISH AND INSTALL 12" X 10" TEE (P.E.)
14. FURNISH AND INSTALL 12" X 8" TEE (P.E.)
21. FURNISH AND INSTALL FIRE HYDRANT ASSEMBLY PER CVWD STD. DWG. NO. 113.

REV.	DESCRIPTION	DATE	APP'D

Underground Service Alert
Call: TOLL FREE
811
TWO WORKING DAYS BEFORE YOU DIG

REGISTERED PROFESSIONAL ENGINEER TUAN TRUONG No. 80604 Exp. 03-31-27 CIVIL STATE OF CALIFORNIA

PLANS APPROVED BY:
TUAN TRUONG, P.E.,
ENGINEERING MANAGER (CAPITAL & DEVELOPMENT)
DATE: 01-21-26 R.C.E. 80604 EXP. 03-31-27

DESIGNED BY: TUAN T.
DRAWN BY: TYLER B.
CHECKED BY: TUAN T.
DATE: 5/28/25

BAR SCALE BELOW IS ONE INCH ON ORGINAL DRAWING. IF NOT ONE INCH ON THIS SHEET, ADJUST SCALE ACCORDINGLY.
0" 1"

Cucamonga Valley Water District
10440 ASHFORD STREET,
RANCHO CUCAMONGA, CA 91729 (909) 987-2591

12" WATERLINE IN BASE LINE RD
CP25032
PLAN AND PROFILE - STA 17+00 TO STA 21+50

C-3
AB
SHT. 7 OF 18

W.O. CP25032

Lastsaved: TYLERB
Q:\CADD\CCWD CADD Drawings\Capital Improvements\Cp-25032 (Construct Waterline in Baseline Rd from Deer Creek to Milliken)\dwg\TB Working files\CP25032 Plan and Profile.dwg 1/22/2026 1:42 PM

NOTE:
CONTRACTOR TO POTHOLE AND VERIFY ELEVATION OF UTILITIES PRIOR TO CONSTRUCTION.

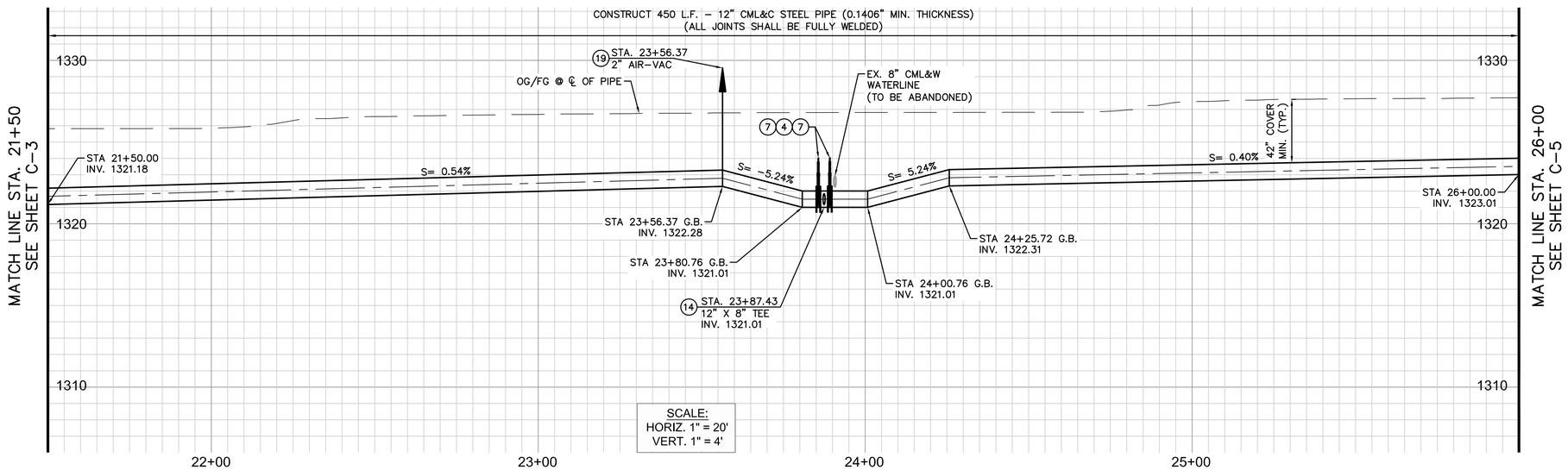

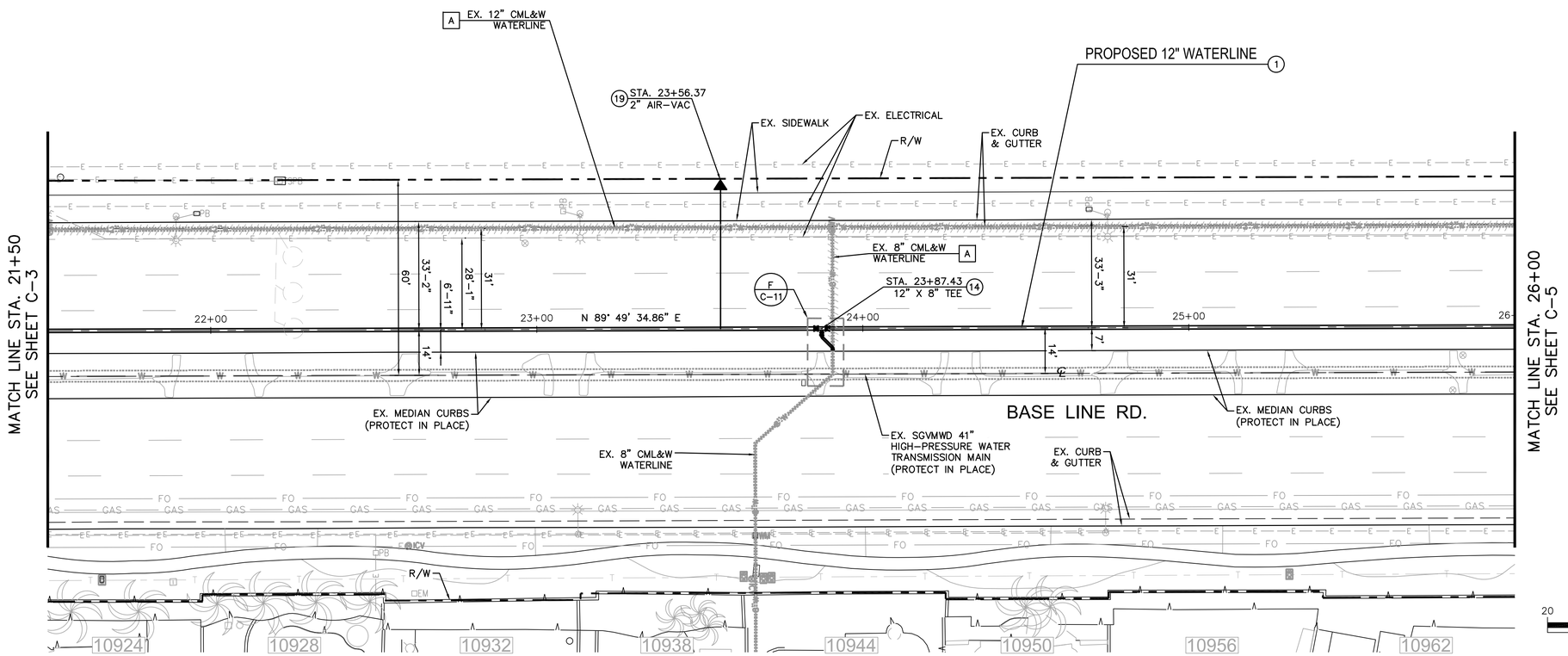

DEMOLITION NOTES

A ABANDON EXISTING PIPE IN PLACE. TO REMAIN IN SERVICE UNTIL NEW WATERLINE IS INSTALLED.

CONSTRUCTION NOTES

1. FURNISH AND INSTALL 12" CML&C STEEL PIPE
4. FURNISH AND INSTALL 12" R.W. GATE VALVE (CL150) PER CVWD STD DWG. NO. 115
7. FURNISH AND INSTALL 12" S.O.W. FLANGE (CL150)
14. FURNISH AND INSTALL 12" X 8" TEE (P.E.)
19. FURNISH AND INSTALL 2" AIR VACCUM PER CVWD STD. DWG. 120.

REV.	DESCRIPTION	DATE	APP'D

Underground Service Alert
Call: TOLL FREE
811
TWO WORKING DAYS BEFORE YOU DIG

REGISTERED PROFESSIONAL ENGINEER TUAN TRUONG No. 80604 Exp. 03-31-27 CIVIL STATE OF CALIFORNIA

PLANS APPROVED BY:
TUAN TRUONG, P.E.,
ENGINEERING MANAGER (CAPITAL & DEVELOPMENT)
DATE: 01-21-26 R.C.E. 80604 EXP. 03-31-27

DESIGNED BY: TUAN T.
DRAWN BY: TYLER B.
CHECKED BY: TUAN T.
DATE: 5/28/25

BAR SCALE BELOW IS ONE INCH ON ORGINAL DRAWING. IF NOT ONE INCH ON THIS SHEET, ADJUST SCALE ACCORDINGLY.
0" 1"

Cucamonga Valley Water District
10440 ASHFORD STREET,
RANCHO CUCAMONGA, CA 91729 (909) 987-2591

12" WATERLINE IN BASE LINE RD
CP25032
PLAN AND PROFILE - STA 21+50 TO STA 26+00

C-4
AB
SHT. 8 OF 18

W.O. CP25032

Lastsaved: TYLERB
Q:\CADD\CCWD CADD Drawings\Capital Improvements\Cp-25032 (Construct Waterline in Baseline Rd from Deer Creek to Milliken)\dwg\TB Working files\CP25032 Plan and Profile.dwg 1/22/2026 1:42 PM

NOTE:
CONTRACTOR TO POTHOLE AND VERIFY ELEVATION OF UTILITIES PRIOR TO CONSTRUCTION.

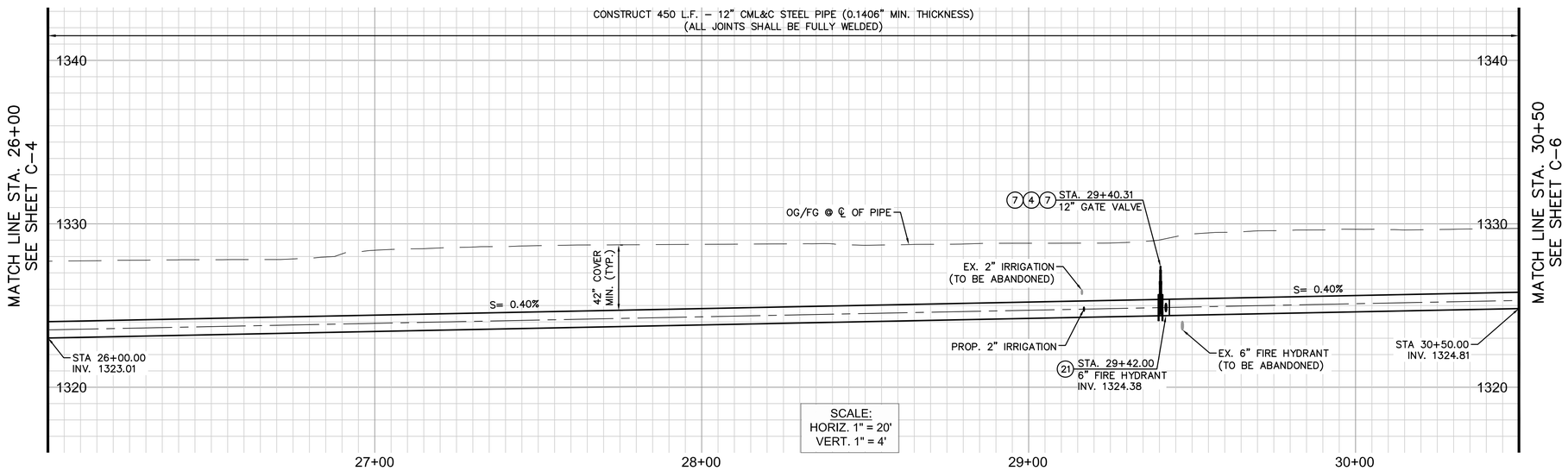

DEMOLITION NOTES

- A — ABANDON EXISTING PIPE IN PLACE. TO REMAIN IN SERVICE UNTIL NEW WATERLINE IS INSTALLED.
- E — REMOVE EXISTING F.H. HEAD AND RETURN TO YARD.

CONSTRUCTION NOTES

1. FURNISH AND INSTALL 12" CML&C STEEL PIPE
4. FURNISH AND INSTALL 12" R.W. GATE VALVE (CL150) PER CVWD STD DWG. NO. 115
7. FURNISH AND INSTALL 12" S.O.W. FLANGE (CL150)
21. FURNISH AND INSTALL FIRE HYDRANT ASSEMBLY PER CVWD STD. DWG. NO. 113.

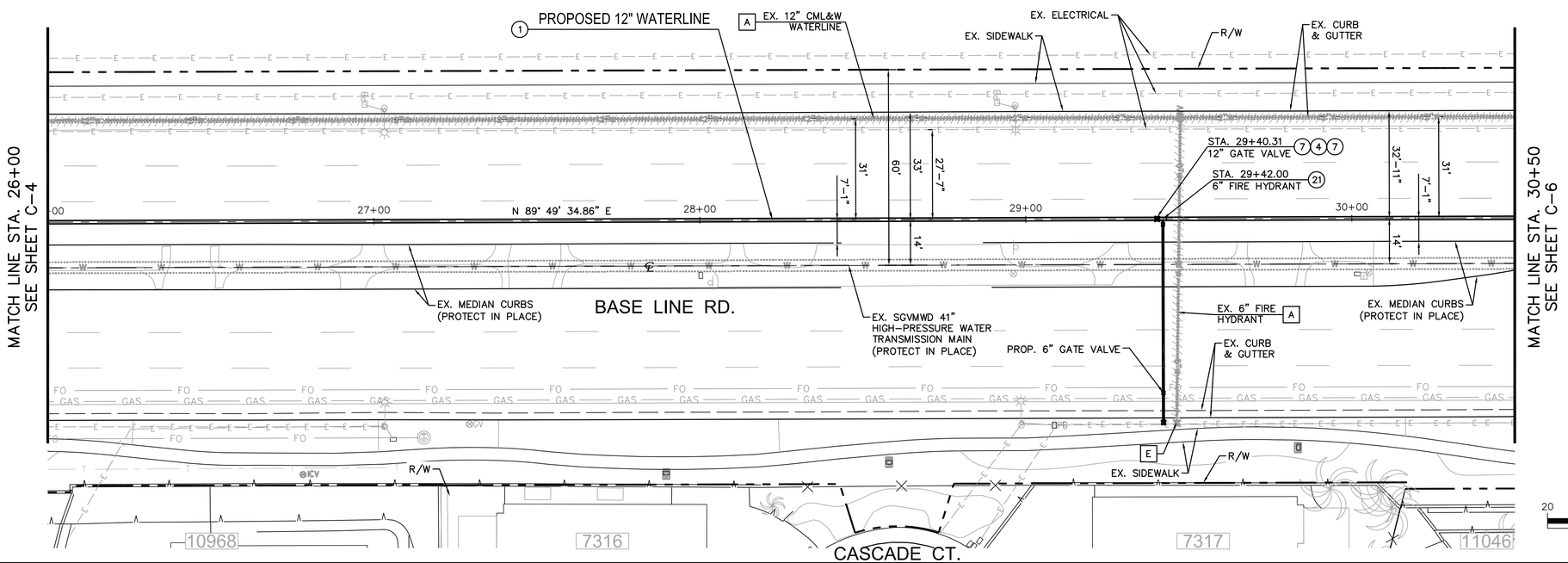

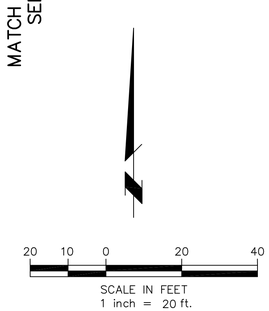

REV.	DESCRIPTION	DATE	APP'D

Underground Service Alert
Call: TOLL FREE
811
TWO WORKING DAYS BEFORE YOU DIG

REGISTERED PROFESSIONAL ENGINEER TUAN TRUONG No. 80604 Exp. 03-31-27 CIVIL STATE OF CALIFORNIA

PLANS APPROVED BY:
TUAN TRUONG, P.E.,
ENGINEERING MANAGER (CAPITAL & DEVELOPMENT)
DATE: 01-21-26 R.C.E. 80604 EXP. 03-31-27

DESIGNED BY: TUAN T.
DRAWN BY: TYLER B.
CHECKED BY: TUAN T.
DATE: 5/28/25

BAR SCALE BELOW IS ONE INCH ON ORGINAL DRAWING. IF NOT ONE INCH ON THIS SHEET, ADJUST SCALE ACCORDINGLY.
0" 1"

Cucamonga Valley Water District
10440 ASHFORD STREET,
RANCHO CUCAMONGA, CA 91729 (909) 987-2591

12" WATERLINE IN BASE LINE RD
CP25032
PLAN AND PROFILE - STA 26+00 TO STA 30+50

C-5
AB
SHT. 9 OF 18

W.O. CP25032

Lastsaved: TYLERB
Q:\CADD\CCWD CADD Drawings\Capital Improvements\Cp-25032 (Construct Waterline in Baseline Rd from Deer Creek to Milliken)\dwg\TB Working files\CP25032 Plan and Profile.dwg 1/22/2026 1:43 PM

NOTE:
CONTRACTOR TO POTHOLE AND VERIFY ELEVATION OF UTILITIES PRIOR TO CONSTRUCTION.

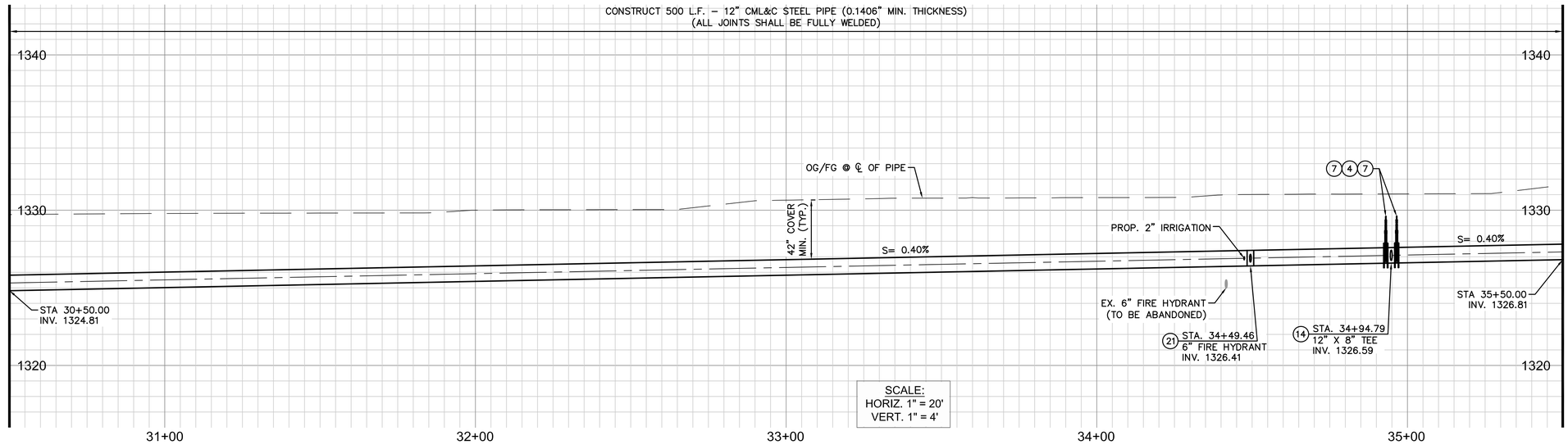

DEMOLITION NOTES

- A ABANDON EXISTING PIPE IN PLACE. TO REMAIN IN SERVICE UNTIL NEW WATERLINE IS INSTALLED.
- E REMOVE EXISTING F.H. HEAD AND RETURN TO YARD.

CONSTRUCTION NOTES

1. FURNISH AND INSTALL 12" CML&C STEEL PIPE
4. FURNISH AND INSTALL 12" R.W. GATE VALVE (CL150) PER CVWD STD DWG. NO. 115
7. FURNISH AND INSTALL 12" S.O.W. FLANGE (CL150)
14. FURNISH AND INSTALL 12" X 8" TEE (P.E.)
21. FURNISH AND INSTALL FIRE HYDRANT ASSEMBLY PER CVWD STD. DWG. NO. 113.

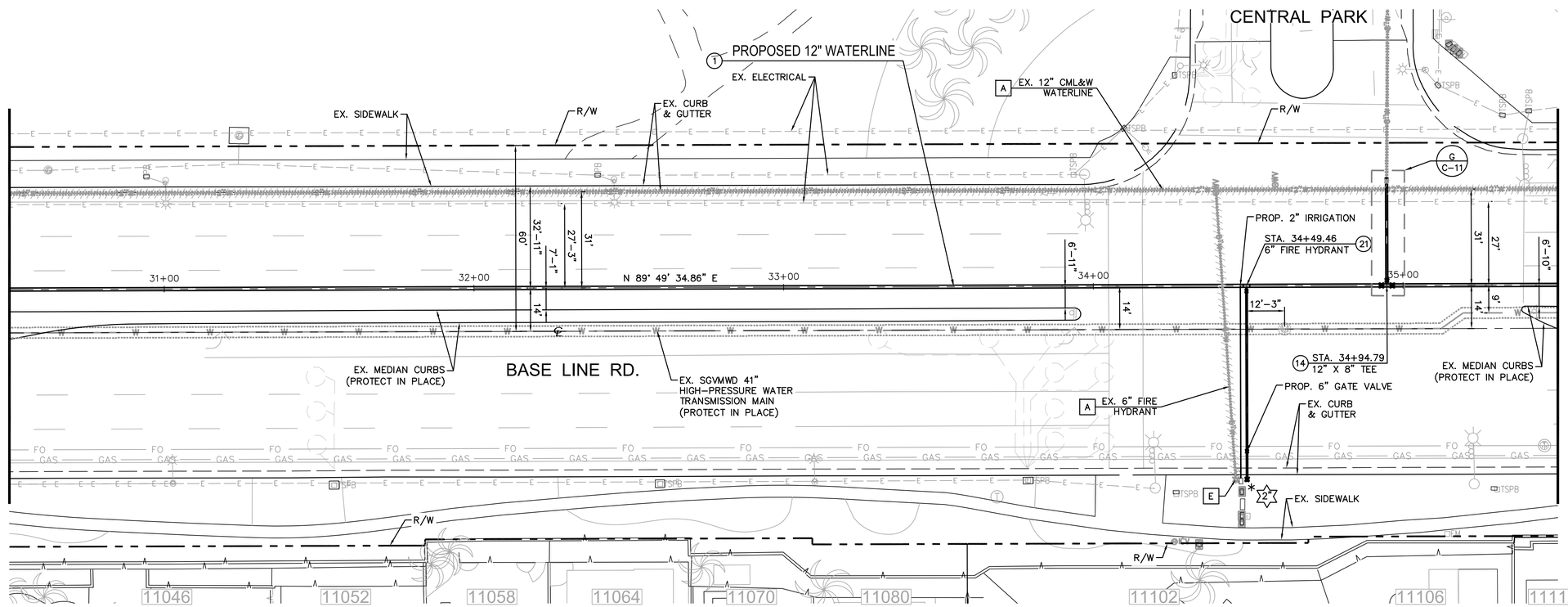

SERVICE NOTES

FURNISH & INSTALL 2" IRRIGATION COPPER SERVICE, INCLUDING INSTALL DISTRICT FURNISHED AMI READY METER (SIZE AS NOTED) & 19.5"X32.25"X12" METER BOX, AND CONNECT PER CVWD STD. DWG. 103. SHOWN PLAN ONLY.

ABANDON EXISTING SERVICE WITH MAIN *

SCALE IN FEET
1 inch = 20 ft.

REV.	DESCRIPTION	DATE	APP'D

Underground Service Alert
Call: TOLL FREE
811
TWO WORKING DAYS BEFORE YOU DIG

REGISTERED PROFESSIONAL ENGINEER TUAN TRUONG No. 80604 Exp. 03-31-27 CIVIL STATE OF CALIFORNIA

PLANS APPROVED BY:
TUAN TRUONG, P.E.,
ENGINEERING MANAGER (CAPITAL & DEVELOPMENT)
DATE: 01-21-26 R.C.E. 80604 EXP. 03-31-27

DESIGNED BY: TUAN T.
DRAWN BY: TYLER B.
CHECKED BY: TUAN T.
DATE: 5/28/25

BAR SCALE BELOW IS ONE INCH ON ORGINAL DRAWING. IF NOT ONE INCH ON THIS SHEET, ADJUST SCALE ACCORDINGLY.
0" 1"

Cucamonga Valley Water District
10440 ASHFORD STREET,
RANCHO CUCAMONGA, CA 91729 (909) 987-2591

12" WATERLINE IN BASE LINE RD
CP25032
PLAN AND PROFILE - STA 30+50 TO STA 35+50

C-6
AB
SHT. 10 OF 18

W.O. CP25032

Lastsaved: TYLERB
Q:\CADD\CCWD CADD Drawings\Capital Improvements\Cp-25032 (Construct Waterline in Baseline Rd from Deer Creek to Milliken)\dwg\TB Working files\CP25032 Plan and Profile.dwg 1/22/2026 1:43 PM

NOTE:
CONTRACTOR TO POTHOLE AND VERIFY ELEVATION OF UTILITIES PRIOR TO CONSTRUCTION.

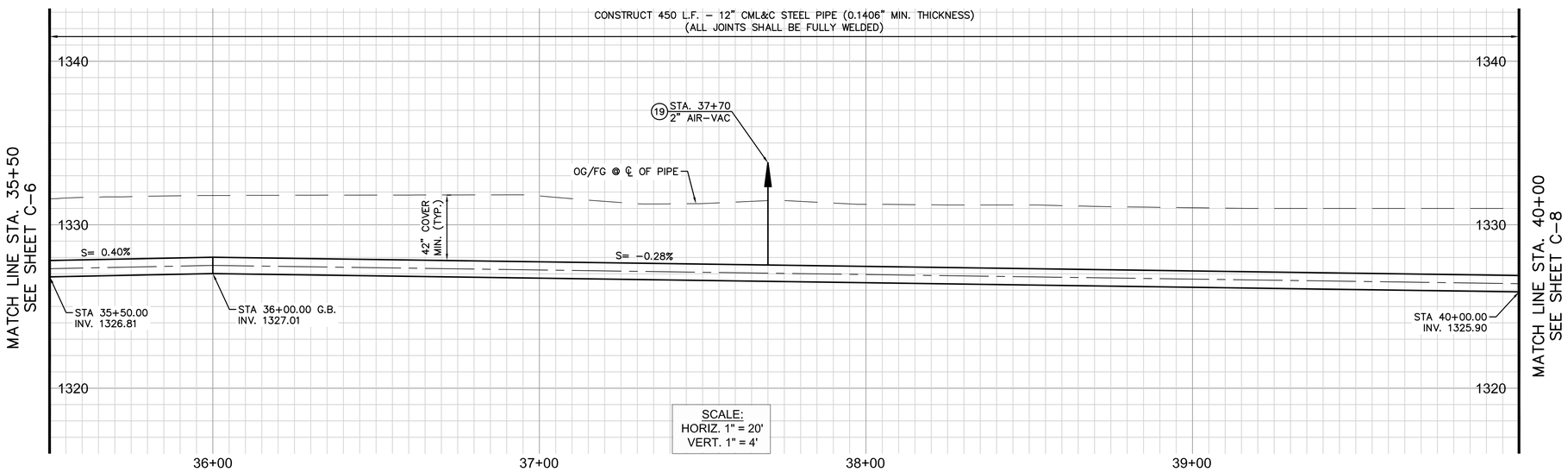

DEMOLITION NOTES

- A ABANDON EXISTING PIPE IN PLACE. TO REMAIN IN SERVICE UNTIL NEW WATERLINE IS INSTALLED.
- H REMOVE EXISTING AIR–VAC ASSEMBLY AND RETURN TO YARD

CONSTRUCTION NOTES

- 1 FURNISH AND INSTALL 12" CML&C STEEL PIPE
- 16 FURNISH AND INSTALL 12" CML&C – 45° BEND (P.E.)
- 19 FURNISH AND INSTALL 2" AIR VACCUM PER CVWD STD. DWG. 120.

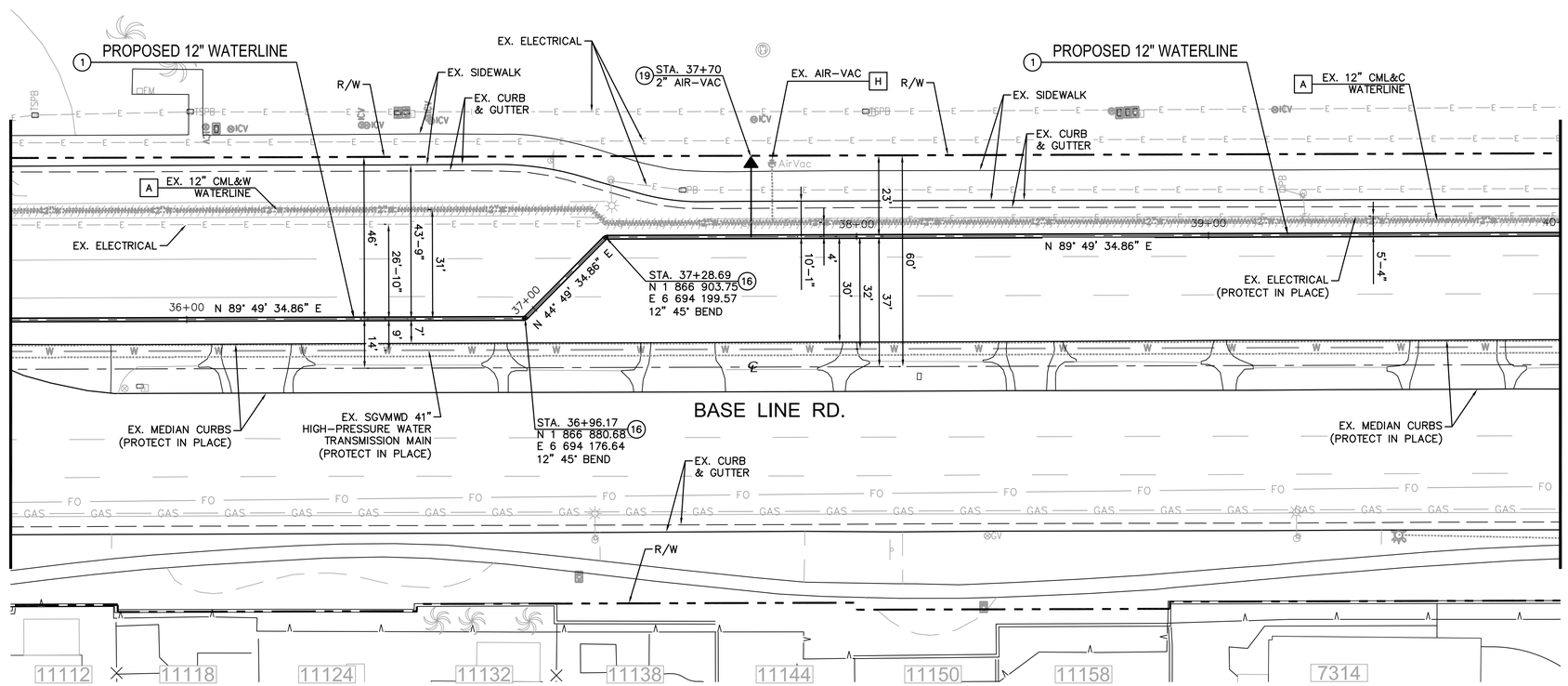

SCALE IN FEET
1 inch = 20 ft.

REV.	DESCRIPTION	DATE	APP'D

Underground Service Alert
Call: TOLL FREE
811
TWO WORKING DAYS BEFORE YOU DIG

REGISTERED PROFESSIONAL ENGINEER TUAN TRUONG No. 80604 Exp. 03–31–27 CIVIL STATE OF CALIFORNIA

PLANS APPROVED BY:
TUAN TRUONG, P.E.,
ENGINEERING MANAGER (CAPITAL & DEVELOPMENT)
DATE: 01–21–26 R.C.E. 80604 EXP. 03–31–27

DESIGNED BY: TUAN T.
DRAWN BY: TYLER B.
CHECKED BY: TUAN T.
DATE: 5/28/25

BAR SCALE BELOW IS ONE INCH ON ORGINAL DRAWING. IF NOT ONE INCH ON THIS SHEET, ADJUST SCALE ACCORDINGLY.
0" 1"

Cucamonga Valley Water District
10440 ASHFORD STREET,
RANCHO CUCAMONGA, CA 91729 (909) 987-2591

12" WATERLINE IN BASE LINE RD
CP25032
PLAN AND PROFILE - STA 35+50 TO STA 40+00

C-7
AB
SHT. 11 OF 18

W.O. CP25032

Lastsaved: TYLERB
Q:\CADD\CCWD CADD Drawings\Capital Improvements\Cp-25032 (Construct Waterline in Baseline Rd from Deer Creek to Milliken)\dwg\TB Working files\CP25032 Plan and Profile.dwg 1/22/2026 1:43 PM

NOTE:
CONTRACTOR TO POTHOLE AND VERIFY ELEVATION OF UTILITIES PRIOR TO CONSTRUCTION.

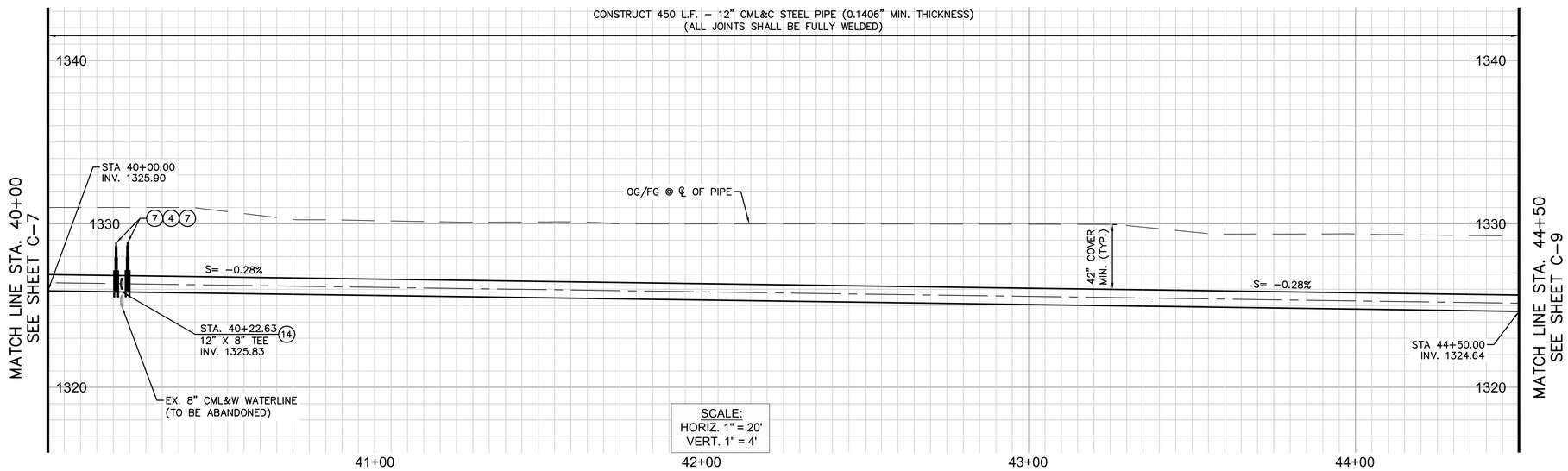

DEMOLITION NOTES

A ABANDON EXISTING PIPE IN PLACE. TO REMAIN IN SERVICE UNTIL NEW WATERLINE IS INSTALLED.

CONSTRUCTION NOTES

1. FURNISH AND INSTALL 12" CML&C STEEL PIPE
4. FURNISH AND INSTALL 12" R.W. GATE VALVE (CL150) PER CVWD STD DWG. NO. 115
7. FURNISH AND INSTALL 12" S.O.W. FLANGE (CL150)
14. FURNISH AND INSTALL 12" X 8" TEE (P.E.)

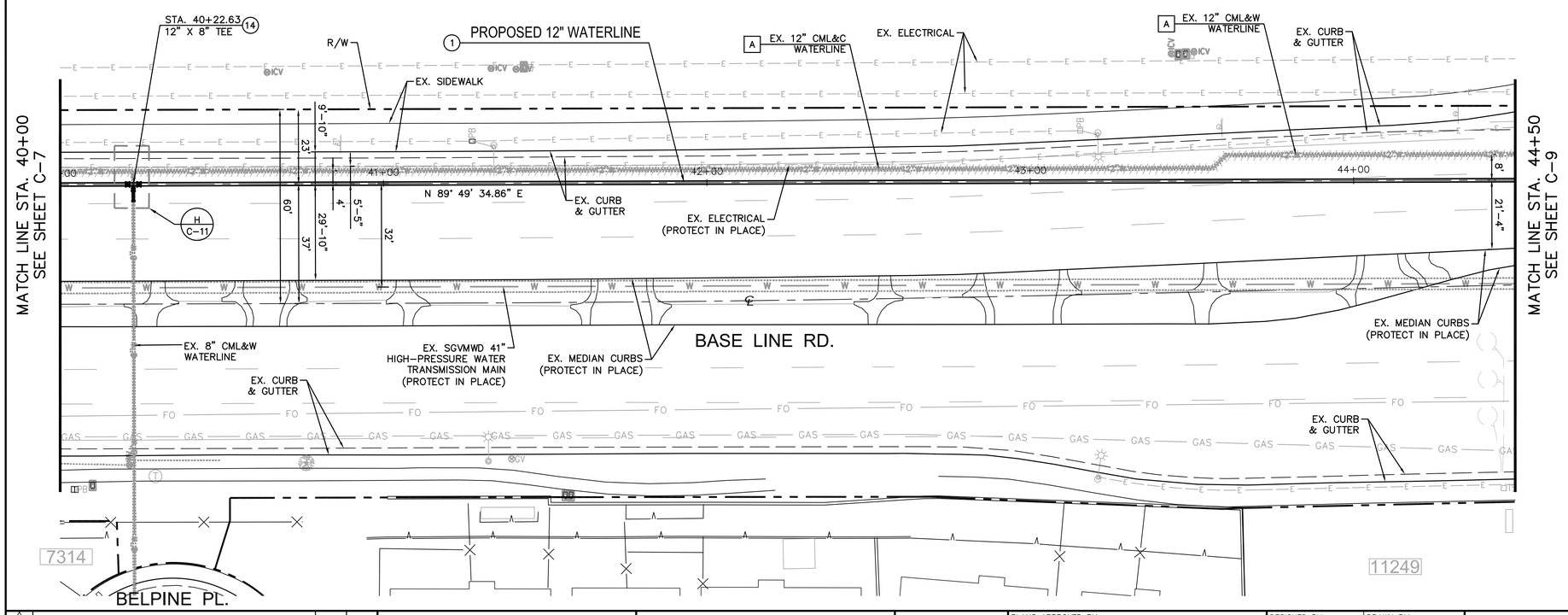

SCALE IN FEET
1 inch = 20 ft.

REV.	DESCRIPTION	DATE	APP'D

Underground Service Alert
Call: TOLL FREE
811
TWO WORKING DAYS BEFORE YOU DIG

REGISTERED PROFESSIONAL ENGINEER TUAN TRUONG No. 80604 Exp. 03–31–27 CIVIL STATE OF CALIFORNIA

PLANS APPROVED BY:
TUAN TRUONG, P.E.,
ENGINEERING MANAGER (CAPITAL & DEVELOPMENT)
DATE: 01–21–26 R.C.E. 80604 EXP. 03–31–27

DESIGNED BY: TUAN T.
DRAWN BY: TYLER B.
CHECKED BY: TUAN T.
DATE: 5/28/25

BAR SCALE BELOW IS ONE INCH ON ORGINAL DRAWING. IF NOT ONE INCH ON THIS SHEET, ADJUST SCALE ACCORDINGLY.
0" 1"

Cucamonga Valley Water District
10440 ASHFORD STREET,
RANCHO CUCAMONGA, CA 91729 (909) 987-2591

12" WATERLINE IN BASE LINE RD
CP25032
PLAN AND PROFILE - STA 40+00 TO STA 44+50

C-8
AB
SHT. 12 OF 18

W.O. CP25032

Lastsaved: TYLERB
Q:\CADD\CCWD CADD Drawings\Capital Improvements\Cp-25032 (Construct Waterline in Baseline Rd from Deer Creek to Milliken)\dwg\TB Working files\CP25032 Plan and Profile.dwg 1/22/2026 1:43 PM

NOTE:
CONTRACTOR TO POTHOLE AND VERIFY ELEVATION OF UTILITIES PRIOR TO CONSTRUCTION.

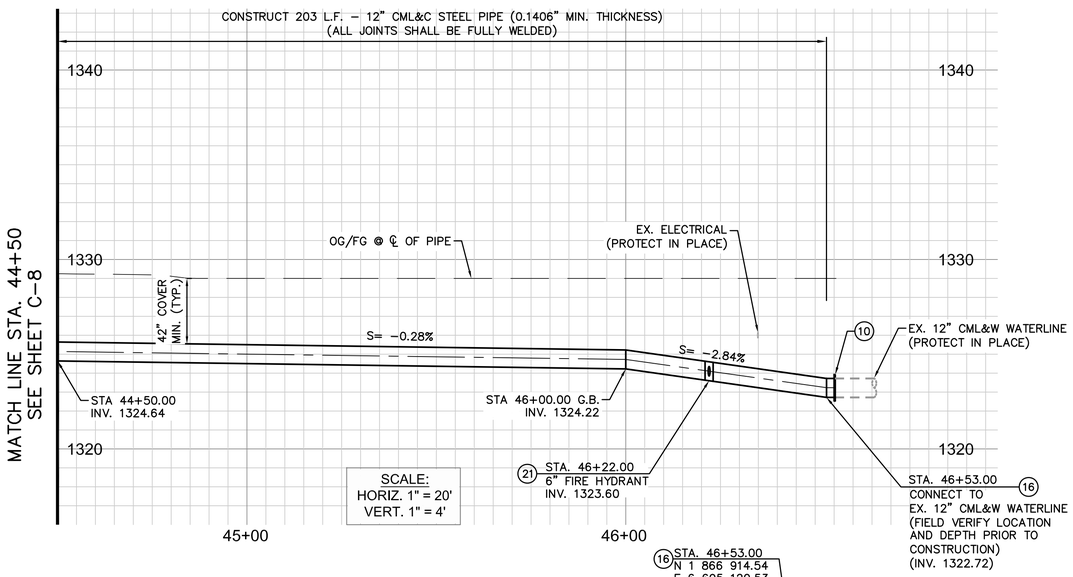

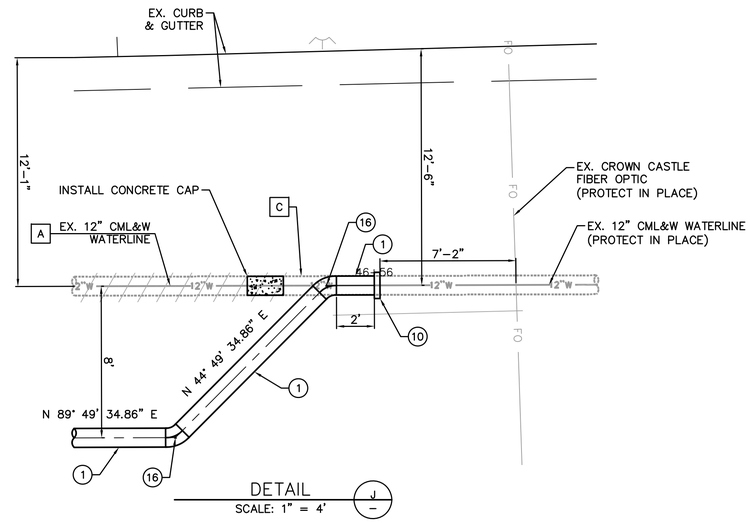

DEMOLITION NOTES

- A ABANDON EXISTING PIPE IN PLACE. TO REMAIN IN SERVICE UNTIL NEW WATERLINE IS INSTALLED.
- C REMOVE INTERFERING PORTIONS OF EXISTING PIPE AS NECESSARY.

CONSTRUCTION NOTES

1. FURNISH AND INSTALL 12" CML&C STEEL PIPE
10. FURNISH AND INSTALL 12" BUTTSTRAP WITH HAND HOLES
16. FURNISH AND INSTALL 12" CML&C – 45° BEND (P.E.)
21. FURNISH AND INSTALL FIRE HYDRANT ASSEMBLY PER CVWD STD. DWG. NO. 113.

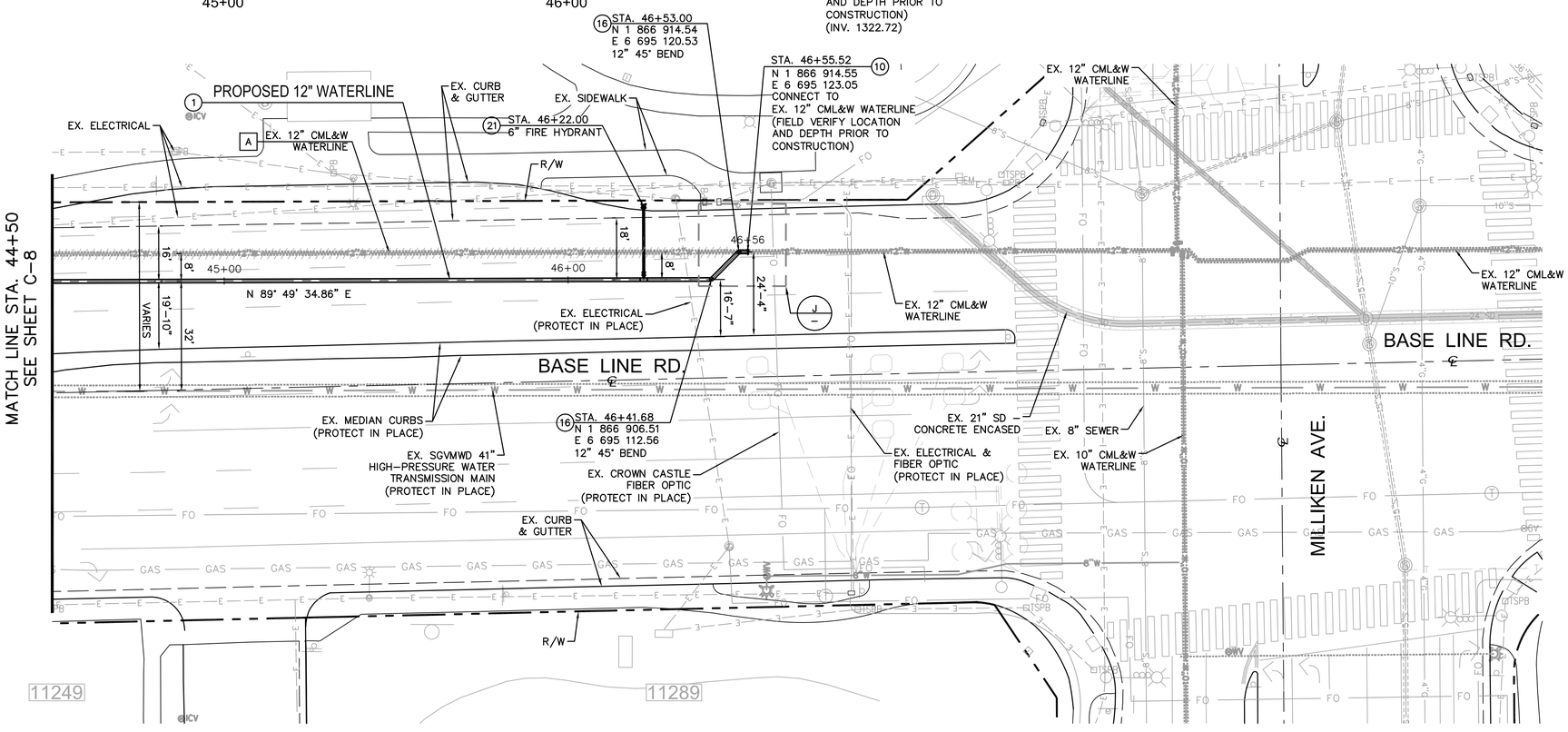

20 10 0 20 40
SCALE IN FEET
1 inch = 20 ft.

REV.	DESCRIPTION	DATE	APP'D

Underground Service Alert
Call: TOLL FREE
811
TWO WORKING DAYS BEFORE YOU DIG

REGISTERED PROFESSIONAL ENGINEER TUAN TRUONG No. 80604 Exp. 03-31-27 CIVIL STATE OF CALIFORNIA

PLANS APPROVED BY:
TUAN TRUONG, P.E.,
ENGINEERING MANAGER (CAPITAL & DEVELOPMENT)
DATE: 01-21-26 R.C.E. 80604 EXP. 03-31-27

DESIGNED BY: TUAN T.
DRAWN BY: TYLER B.
CHECKED BY: TUAN T.
DATE: 5/28/25
BAR SCALE BELOW IS ONE INCH ON ORGINAL DRAWING. IF NOT ONE INCH ON THIS SHEET, ADJUST SCALE ACCORDINGLY.
0" 1"

Cucamonga Valley Water District
10440 ASHFORD STREET,
RANCHO CUCAMONGA, CA 91729 (909) 987-2591

12" WATERLINE IN BASE LINE RD
CP25032
PLAN AND PROFILE - STA 44+50 TO STA 46+53

C-9
AB
SHT. 13 OF 18

W.O. CP25032

Lastsaved: TYLERB
Q:\CADD\CCWD CADD Drawings\Capital Improvements\Cp-25032 (Construct Waterline in Baseline Rd from Deer Creek to Milliken)\dwg\TB Working files\CP25032 Plan and Profile.dwg 1/22/2026 1:43 PM

NOTE:
CONTRACTOR TO POTHOLE AND VERIFY ELEVATION OF UTILITIES PRIOR TO CONSTRUCTION.

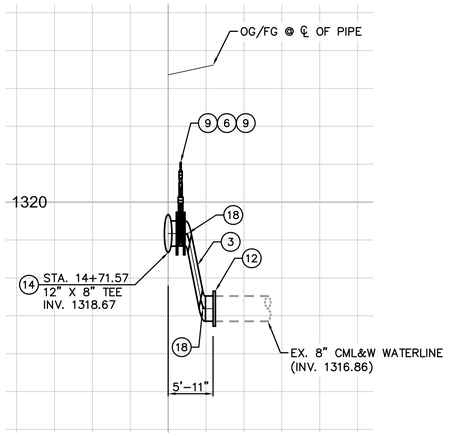

CROSS SECTION C-C
SCALE: N.T.S.

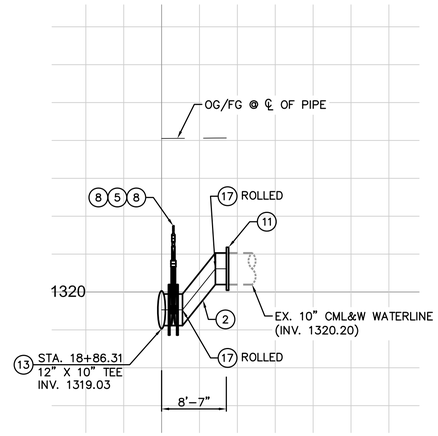

CROSS SECTION D-D
SCALE: N.T.S.

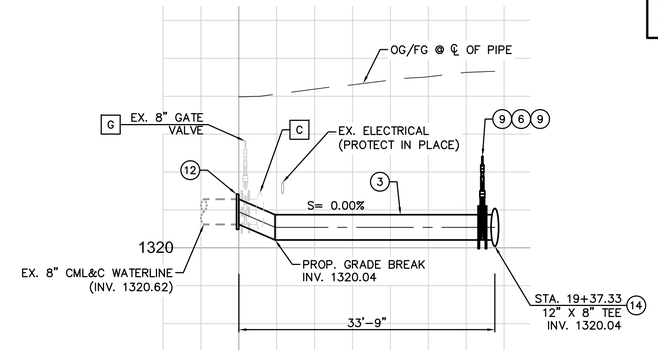

CROSS SECTION E-E
SCALE: N.T.S.

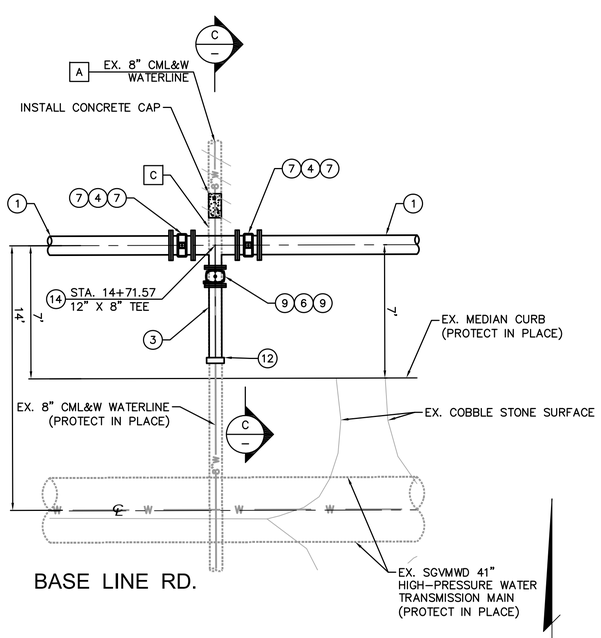

DETAIL C/C-2
SCALE: 1" = 4'

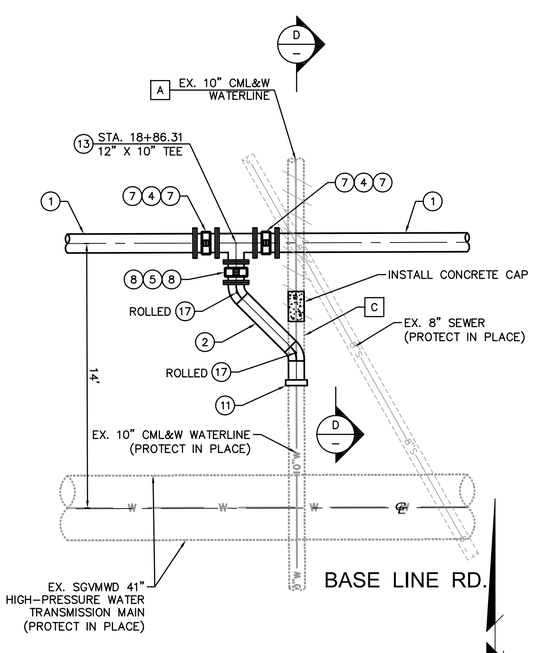

DETAIL D/C-3
SCALE: 1" = 4'

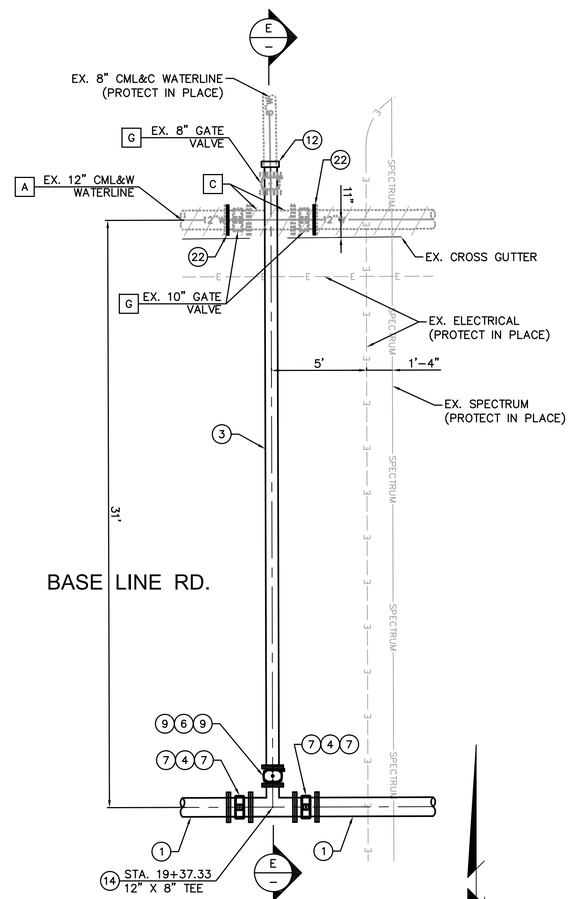

DETAIL E/C-3
SCALE: 1" = 4'

DEMOLITION NOTES

- A ABANDON EXISTING PIPE IN PLACE. TO REMAIN IN SERVICE UNTIL NEW WATERLINE IS INSTALLED.
- C REMOVE INTERFERING PORTIONS OF EXISTING PIPE AS NECESSARY.
- G REMOVE EXISTING VALVE AND RETURN TO YARD.

CONSTRUCTION NOTES

1. FURNISH AND INSTALL 12" CML&C STEEL PIPE
2. FURNISH AND INSTALL 10" CML&C STEEL PIPE
3. FURNISH AND INSTALL 8" CML&C STEEL PIPE
4. FURNISH AND INSTALL 12" R.W. GATE VALVE (CL150) PER CVWD STD DWG. NO. 115
5. FURNISH AND INSTALL 10" R.W. GATE VALVE (CL150) PER CVWD STD DWG. NO. 115
6. FURNISH AND INSTALL 8" R.W. GATE VALVE (CL150) PER CVWD STD DWG. NO. 115
7. FURNISH AND INSTALL 12" S.O.W. FLANGE (CL150)
8. FURNISH AND INSTALL 10" S.O.W. FLANGE (CL150)
9. FURNISH AND INSTALL 8" S.O.W. FLANGE (CL150)
11. FURNISH AND INSTALL 10" BUTTSTRAP WITH HAND HOLES
12. FURNISH AND INSTALL 8" BUTTSTRAP WITH HAND HOLES
13. FURNISH AND INSTALL 12" X 10" TEE (P.E.)
14. FURNISH AND INSTALL 12" X 8" TEE (P.E.)
17. FURNISH AND INSTALL 10" CML&C – 45° BEND (P.E.)
18. FURNISH AND INSTALL 8" CML&C – 45° BEND (P.E.)
22. FURNISH AND INSTALL 12" BLIND FLANGE

REV.	DESCRIPTION	DATE	APP'D

Underground Service Alert
Call: TOLL FREE
811
TWO WORKING DAYS BEFORE YOU DIG

REGISTERED PROFESSIONAL ENGINEER TUAN TRUONG No. 80604 Exp. 03-31-27 CIVIL STATE OF CALIFORNIA

PLANS APPROVED BY:
TUAN TRUONG, P.E.,
ENGINEERING MANAGER (CAPITAL & DEVELOPMENT)
DATE: 01-21-26 R.C.E. 80604 EXP. 03-31-27

DESIGNED BY: TUAN T.
DRAWN BY: TYLER B.
CHECKED BY: TUAN T.
DATE: 5/28/25

BAR SCALE BELOW IS ONE INCH ON ORGINAL DRAWING. IF NOT ONE INCH ON THIS SHEET, ADJUST SCALE ACCORDINGLY.
0" 1"

Cucamonga Valley Water District
10440 ASHFORD STREET,
RANCHO CUCAMONGA, CA 91729 (909) 987-2591

12" WATERLINE IN BASE LINE RD
CP25032
DETAILS

C-10
AB
SHT. 14 OF 18

W.O. CP25032

Lastsaved: TYLERB
Q:\CADD\CCWD CADD Drawings\Capital Improvements\Cp-25032 (Construct Waterline in Baseline Rd from Deer Creek to Milliken)\dwg\TB Working files\CP25032 Plan and Profile.dwg 1/22/2026 1:43 PM

NOTE:
CONTRACTOR TO POTHOLE AND VERIFY ELEVATION OF UTILITIES PRIOR TO CONSTRUCTION.

DEMOLITION NOTES

- A ABANDON EXISTING PIPE IN PLACE. TO REMAIN IN SERVICE UNTIL NEW WATERLINE IS INSTALLED.
- C REMOVE INTERFERING PORTIONS OF EXISTING PIPE AS NECESSARY.
- G REMOVE EXISTING VALVE AND RETURN TO YARD.

CONSTRUCTION NOTES

- (1) FURNISH AND INSTALL 12" CML&C STEEL PIPE
- (3) FURNISH AND INSTALL 8" CML&C STEEL PIPE
- (4) FURNISH AND INSTALL 12" R.W. GATE VALVE (CL150) PER CVWD STD DWG. NO. 115
- (6) FURNISH AND INSTALL 8" R.W. GATE VALVE (CL150) PER CVWD STD DWG. NO. 115
- (7) FURNISH AND INSTALL 12" S.O.W. FLANGE (CL150)
- (9) FURNISH AND INSTALL 8" S.O.W. FLANGE (CL150)
- (12) FURNISH AND INSTALL 8" BUTTSTRAP WITH HAND HOLES
- (14) FURNISH AND INSTALL 12" X 8" TEE (P.E.)
- (18) FURNISH AND INSTALL 8" CML&C – 45° BEND (P.E.)
- (23) FURNISH AND INSTALL 8" BLIND FLANGE

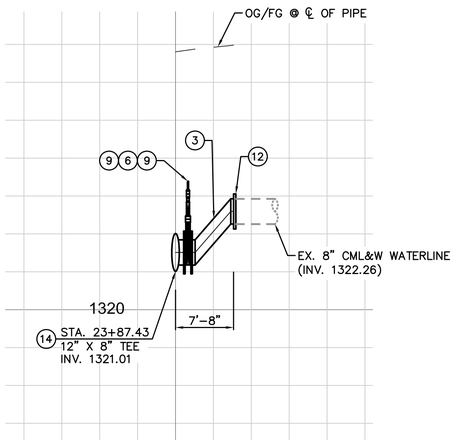

CROSS SECTION F–F
SCALE: N.T.S.

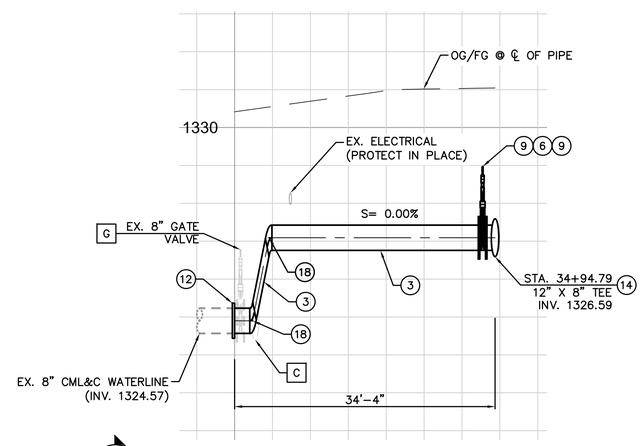

CROSS SECTION G–G
SCALE: N.T.S.

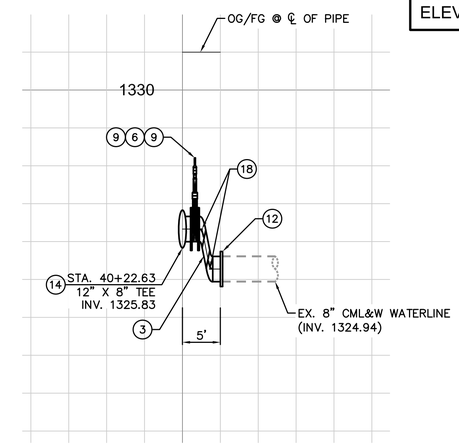

CROSS SECTION H–H
SCALE: N.T.S.

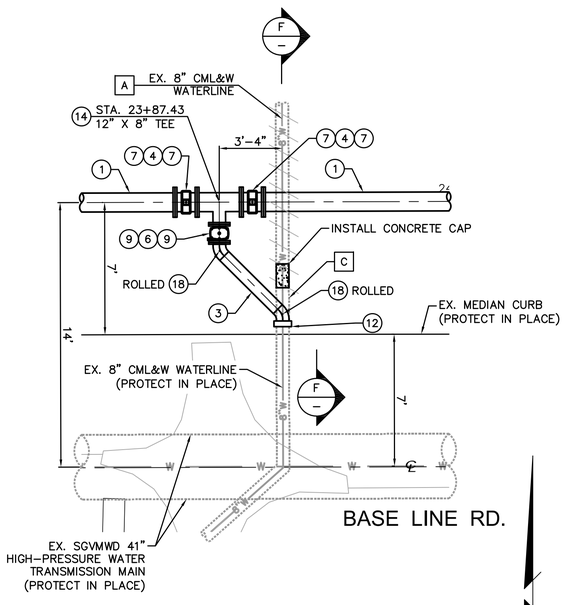

DETAIL F C–4
SCALE: 1" = 4'

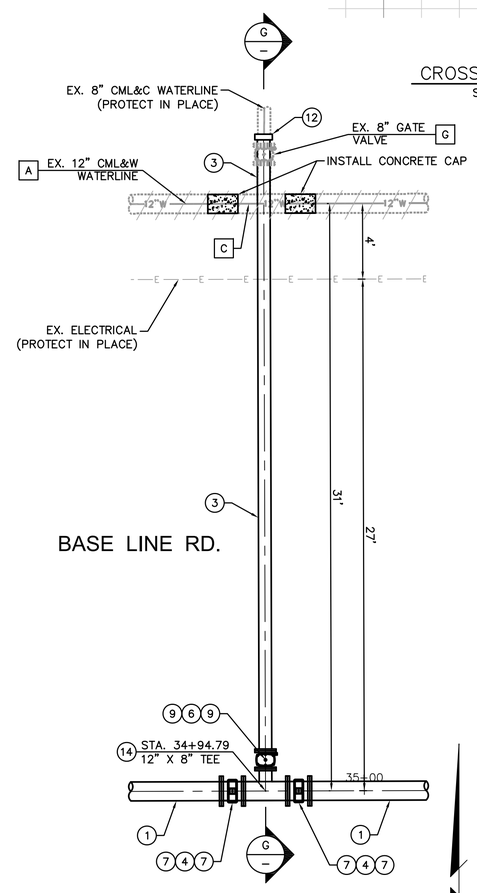

DETAIL G C–6
SCALE: 1" = 4'

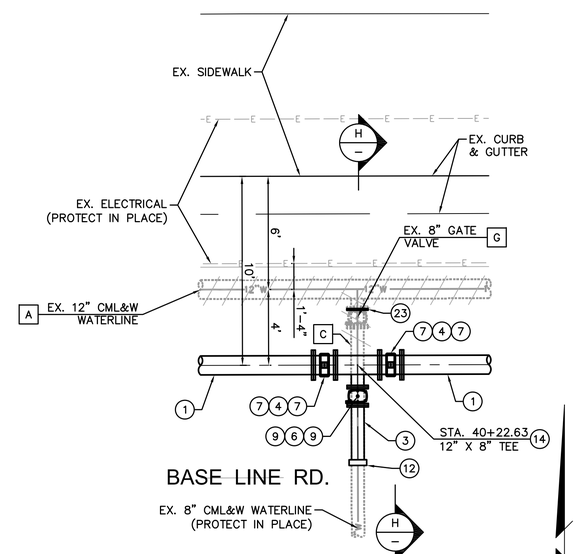

DETAIL H C–8
SCALE: 1" = 4'

REV.	DESCRIPTION	DATE	APP'D

Underground Service Alert
Call: TOLL FREE
811
TWO WORKING DAYS BEFORE YOU DIG

REGISTERED PROFESSIONAL ENGINEER TUAN TRUONG No. 80604 Exp. 03-31-27 CIVIL STATE OF CALIFORNIA

PLANS APPROVED BY:
TUAN TRUONG, P.E.,
ENGINEERING MANAGER (CAPITAL & DEVELOPMENT)
DATE: 01-21-26 R.C.E. 80604 EXP. 03-31-27

DESIGNED BY: TUAN T.
DRAWN BY: TYLER B.
CHECKED BY: TUAN T.
DATE: 5/28/25
BAR SCALE BELOW IS ONE INCH ON ORGINAL DRAWING. IF NOT ONE INCH ON THIS SHEET, ADJUST SCALE ACCORDINGLY.
0" 1"

Cucamonga Valley Water District
10440 ASHFORD STREET,
RANCHO CUCAMONGA, CA 91729 (909) 987-2591

12" WATERLINE IN BASE LINE RD
CP25032
DETAILS

C-11
AB
SHT. 15 OF 18

W.O. CP25032

Lastsaved: TYLERB
Q:\CADD\CCWD CADD Drawings\Capital Improvements\Cp-25032 (Construct Waterline in Baseline Rd from Deer Creek to Milliken)\dwg\TB Working files\CP25032 Plan and Profile.dwg 1/22/2026 1:44 PM